MX310, MX410, MX51x & XM114x

Machine Type 7015-270, -47x, -6xx

Service Manual

- Start diagnostics
- Maintenance
- Safety and notices
- Trademarks
- Index

February 07, 2013 www.lexmark.com

P/N 12G2376

Product information

Product name:

Lexmark MX310, MX410 and MX510 Series

Machine type:

7015

Model(s):

270, 470, 630, 670, 675

Edition notice

February 07, 2013

The following paragraph does not apply to any country where such provisions are inconsistent with local law: LEXMARK INTERNATIONAL, INC., PROVIDES THIS PUBLICATION "AS IS" WITHOUT WARRANTY OF ANY KIND, EITHER EXPRESS OR IMPLIED, INCLUDING, BUT NOT LIMITED TO, THE IMPLIED WARRANTIES OF MERCHANTABILITY OR FITNESS FOR A PARTICULAR PURPOSE. Some states do not allow disclaimer of express or implied warranties in certain transactions; therefore, this statement may not apply to you.

This publication could include technical inaccuracies or typographical errors. Changes are periodically made to the information herein; these changes will be incorporated in later editions. Improvements or changes in the products or the programs described may be made at any time.

References in this publication to products, programs, or services do not imply that the manufacturer intends to make these available in all countries in which it operates. Any reference to a product, program, or service is not intended to state or imply that only that product, program, or service may be used. Any functionally equivalent product, program, or service that does not infringe any existing intellectual property right may be used instead. Evaluation and verification of operation in conjunction with other products, programs, or services, except those expressly designated by the manufacturer, are the user's responsibility.

Trademarks

Lexmark and Lexmark with diamond design are trademarks of Lexmark International, Inc., registered in the United States and/or other countries.

PCL® is a registered trademark of the Hewlett-Packard Company.

All other trademarks are the property of their respective owners.

P/N 12G2376

Table of contents

Notices and safety information

Laser notices

Laser notice

The printer is certified in the U.S. to conform to the requirements of DHHS 21 CFR, Chapter I, Subchapter J for Class I (1) laser products, and elsewhere is certified as a Class I laser product conforming to the requirements of IEC 60825-1.

Class I laser products are not considered to be hazardous. The printer contains internally a Class IIIb (3b) laser that is nominally a 7 milliwatt gallium arsenide laser operating in the wavelength of 655-675 nanometers. The laser system and printer are designed so there is never any human access to laser radiation above a Class I level during normal operation, user maintenance, or prescribed service condition.

Laser-Hinweis

Der Drucker wurde in den USA zertifiziert und entspricht den DHHS-Vorschriften 21 CFR, Kapitel I, Unterkapitel J für Laserprodukte der Klasse I (1); andernorts ist er als Laserprodukt der Klasse I zertifiziert, das den IEC 60825-1-Anforderungen entspricht.

Laserprodukte der Klasse I werden nicht als gefährlich eingestuft. Der Drucker enthält im Inneren einen Laser der Klasse IIIb (3b), und zwar einen 7-Milliwatt-Gallium-Arsenid-Laser, der im Wellenlängenbereich von 655 bis 675 Nanometern arbeitet. Das Lasersystem und der Drucker sind so konstruiert, dass unter normalen Betriebsbedingungen, bei der Wartung durch den Benutzer oder bei den vorgeschriebenen Wartungsbedingungen Menschen keiner Laserstrahlung ausgesetzt sind, die die Werte für Klasse I überschreitet.

Avis relatif à l'utilisation du laser

L'imprimante est certifiée conforme aux exigences de la réglementation des Etats-Unis relative aux produits laser (DHHS 21 CFR, Chapter I, Subchapter J for Class I (1)). Pour les autres pays, elle est certifiée conforme aux exigences des normes IEC 60825-1 relatives aux produits laser de classe I.

Les produits laser de Classe I ne sont pas considérés comme dangereux. L'imprimante contient un laser de classe IIIb (3b), laser arséniure de gallium 7 milliwatts opérant sur une longueur d'onde de l'ordre de 655 à 675 nanomètres. Le système laser ainsi que l'imprimante ont été conçus de manière à ce que personne ne soit exposé à des rayonnements laser dépassant le niveau de classe I dans le cadre d'un fonctionnement normal, de l'entretien par l'utilisateur ou de la maintenance.

Avvertenze sui prodotti laser

La stampante è certificata negli Stati Uniti come stampante conforme ai requisiti DHHS 21 CFR, Capitolo I, Sottocapitolo J per i prodotti laser di Classe I (1), mentre in altri paesi è certificata come prodotto laser di Classe I conforme ai requisiti IEC 60825-1.

I prodotti laser di Classe I non sono considerati pericolosi. La stampante contiene un laser di Classe IIIb (3b), che è nominalmente un laser ad arseniuro di gallio a 7 milliwatt funzionante a una lunghezza d'onda di 655-675 nanometri. Il sistema laser e la stampante sono stati progettati in modo da impedire l'esposizione a radiazioni laser superiori al livello previsto dalla Classe I durante le normali operazioni di stampa, manutenzione o assistenza.

Aviso de láser

Esta impresora se ha certificado en EE. UU. de conformidad con los requisitos de DHHS 21 CFR, capítulo I, subcapítulo J, para los productos láser de Clase I (1), y en otros países está certificada como un producto láser de Clase I de acuerdo con los requisitos de IEC 60825-1.

Los productos láser de Clase I no se consideran peligrosos. La impresora contiene un láser interno de Clase IIIb (3b) que nominalmente es un láser de arseniuro de galio de 7 milivatios que funciona en una longitud de onda de 655-675 nanómetros. El sistema láser y la impresora se han diseñado para que ningún individuo acceda nunca a las radiaciones láser por encima del nivel de Clase I durante su uso normal, ni en tareas de mantenimiento o intervenciones de servicio técnico prescritas.

Aviso sobre laser

A impressora foi certificada nos EUA por estar em conformidade com os requisitos do DHHS 21 CFR, capítulo I, subcapítulo J, para produtos a laser de Classe I (1) e, nos demais países, foi certificada como produto a laser de Classe I em conformidade com os requisitos da IEC 60825-1.

Os produtos a laser de Classe I não são considerados perigosos. A impressora contém, internamente, um laser de Classe IIIb (3b) que é um laser de arsenieto de gálio de 7 miliwatts operando no comprimento de onda de 655-675 nanômetros. O sistema do laser e a impressora foram projetados para que jamais haja acesso humano à radiação do laser acima do nível da Classe I durante a operação normal ou a manutenção pelo usuário ou sob as condições de manutenção prescritas.

Laserinformatie

Deze printer is in de Verenigde Staten gecertificeerd als een product dat voldoet aan de vereisten van DHHS 21 CFR, hoofdstuk 1, paragraaf J voor laserproducten van klasse I (1). Elders is de printer gecertificeerd als een laserproduct van klasse I dat voldoet aan de vereisten van IEC 60825-1.

Laserproducten van klasse I worden geacht geen gevaar op te leveren. De printer bevat intern een laser van klasse IIIb (3b), een galliumarsenide laser met een nominaal vermogen van 7 milliwatt en een golflengtebereik van 655-675 nanometer. Het lasersysteem en de printer zijn zodanig ontworpen dat gebruikers nooit blootstaan aan laserstraling die hoger is dan het toegestane niveau voor klasse I-apparaten, tijdens normaal gebruik, onderhoudswerkzaamheden door de gebruiker of voorgeschreven servicewerkzaamheden.

Lasererklæring

Denne printer er certificeret i USA i henhold til kravene i DHHS 21 CFR, afsnit I, underafsnit J, for Klasse I-laserprodukter (1) og certificeret andetsteds som et Klasse I-laserprodukt i henhold til kravene i IEC 60825-1.

Klasse I-laserprodukter anses ikke for at være farlige. Printeren indeholder internt en klasse IIIb (3b)-laser, der nominelt er en 7 milliwatt galliumarsenid-laser, som fungerer i bølgelængdeområdet 655-675 nanometer. Lasersystemet og printeren er udviklet på en sådan måde, at der ikke er en direkte laserstråling, der overskrider Klasse I-niveauet under normal brug, brugers vedligeholdelse eller de foreskrevne servicebetingelser.

Laserilmoitus

Tämä tulostin on sertifioitu Yhdysvalloissa DHHS 21 CFR, Chapter I, Subchapter J -standardin mukaiseksi luokan I (1) -lasertuotteeksi ja muualla IEC 60825-1 -standardin mukaiseksi luokan I lasertuotteeksi.

Luokan I lasertuotteita ei pidetä haitallisina. Tulostimen sisällä on luokan IIIb (3b) laser, joka on nimellisteholtaan 7 mW:n galliumarsenidilaser ja toimii 655–675 nanometrin aallonpituuksilla. Laserjärjestelmä ja tulostin ovat rakenteeltaan sellaisia, että käyttäjä ei joudu alttiiksi luokkaa 1 suuremmalle säteilylle normaalin käytön, ylläpidon tai huollon aikana.

Lasermeddelande

Skrivaren är certifierad i USA enligt kraven i DHHS 21 CFR, avsnitt I, underavsnitt J för laserprodukter av klass I (1) och i andra länder är den certifierad som en laserprodukt av klass I som uppfyller kraven i IEC 60825-1.

Laserprodukter av klass I anses inte vara skadliga. Skrivaren innehåller en klass IIIb (3b)-laser, vilket är en 7 mW galliumarseniklaser som arbetar inom en våglängd på 655–675 nm. Lasersystemet och skrivaren är utformade så att människor aldrig utsätts för laserstrålning över klass I-nivå under normala förhållanden vid användning, underhåll eller service.

Lasermerknad

Skriveren er sertifisert i USA for samsvar med kravene i DHHS 21 CFR, kapittel I, underkapittel J for laserprodukter av klasse I (1), og er andre steder sertifisert som et laserprodukt av klasse I som samsvarer med kravene i IEC 60825-1.

Laserprodukter av klasse I anses ikke som helseskadelige. Skriveren inneholder en intern laser av klasse IIIb (3b) som nominelt er en 7 milliwatt galliumarsenid-laser, og som opererer i bølgelengder på 655-675 nanometer. Lasersystemet og skriveren er utformet slik at mennesker ikke utsettes for laserstråling utover nivået i klasse I under normal drift, vedlikehold eller foreskrevet service.

Avís sobre el làser

Als EUA, la impressora està certificada de conformitat amb els requisits del capítol I, apartat J del CFR 21 del Departament de Salut i Serveis Humans per a productes làser de classe I (1) i a la resta de països està certificada com a producte làser de classe I d'acord amb els requisits de la norma IEC 60825-1.

Els productes làser de classe I no es consideren perillosos. A l'interior de la impressora hi ha un làser de classe IIIb (3b) que nominalment es un arsenur de galió de 7 mil·liwatts que funciona a una longitud d'ona de 655-675 nanòmetres. El sistema làser y la impressora s'han dissenyat amb l'objectiu d'impedir l'accés humà de la radiació làser superior al nivell de classe I durant un funcionament normal, el manteniment per part de l'usuari o les condicions de servei prescrites.

レーザーに関する通知

本機は、米国においてクラス I（1）レーザー製品に対する DHHS 21 CFR、Chapter I、Subchapter J の要件に準拠し、その他の国では IEC 60825-1 の要件に準拠するクラス I レーザー製品として認可されています。

クラス I レーザー製品は、危険性がないとみなされています。 本機には、クラス IIIb（3b）レーザーが内蔵されています。これは、655 ～ 675 ナノメートルの波長で動作する定格 7 ミリワットのガリウムヒ素レーザーです。 レーザーシステムとプリンタは、通常の操作、ユーザーによるメンテナンス、または所定のサービス条件の下で、ユーザーがクラス I レベルを超えるレーザー放射に絶対にさらされないように設計されています。

레이저 관련 공지

이 프린터는 미국에서 DHHS 21 CFR, Chapter I, Subchapter J 의 요구 사항을 준수하는 클래스 I(1) 레이저 제품으로 승인되었으며 이외 지역에서 IEC 60825-1 의 요구 사항을 준수하는 클래스 I 레이저 제품으로 승인되었습니다.

Class I 레이저 제품은 위험한 제품으로 간주되지 않습니다. 프린터에는 655-675 나노미터의 파장 영역에서 작동하는 공칭 7 밀리와트 갈륨 비소 레이저인 클래스 IIIb(3b) 레이저가 내부에 포함되어 있습니다. 레이저 시스템과 프린터는 정상적인 작동, 사용자 유지 관리 또는 사전 설명된 서비스 조건에는 사람에게 클래스 I 수준 이상의 레이저 방사가 노출되지 않도록 설계되었습니다.

激光注意事项

本打印机在美国认证合乎 DHHS 21 CFR Chapter I，Subchapter J 对分类 I（1）激光产品的标准，而在其他地区则被认证是合乎 IEC 60825-1 的分类 I 激光产品。

一般认为分类 I 激光产品不具有危险性。本打印机内部含有分类 IIIb（3b）的激光，在操作过程中会产生额定 7 毫瓦的砷化镓激光，其波长范围在 655-675nm 之间。本激光系统及打印机的设计，在一般操作、使用者维护或规定内的维修情况下，不会使人体接触分类 I 以上等级的辐射。

雷射聲明

本印表機係經過美國核可，符合 DHHS 21 CFR，Chapter I，Subchapter J 規定的 I (1) 級雷射產品激光注意事項；在美國以外的地區，為符合 IEC 60825-1 規定的 I 級雷射產品。

根據 I 級雷射產品的規定，這類產品不會對人體造成傷害。本機所採用之 IIIb (3b) 級雷射只會產生 7 百萬分之一瓦特 (milliwatt)、波長 655 至 675 億分之一米 (nanometer) 的鎵砷放射線 (gallium arsenide laser)。使用者只要以正確的方法操作及維護保養，並依照先前所述之維修方式進行修護，此印表機與其雷射系統絕不會產生 I 級以上的放射線，而對人體造成傷害。

Safety

Safety information

- The safety of this product is based on testing and approvals of the original design and specific components. The manufacturer is not responsible for safety in the event of use of unauthorized replacement parts.
- The maintenance information for this product has been prepared for use by a professional service person and is not intended to be used by others.
- There may be an increased risk of electric shock and personal injury during disassembly and servicing of this product. Professional service personnel should understand this and take necessary precautions.

CAUTION—POTENTIAL INJURY

The lithium battery in this product is not intended to be replaced. There is a danger of explosion if a lithium battery is incorrectly replaced. Do not recharge, disassemble, or incinerate a lithium battery. Discard used lithium batteries according to the manufacturer's instructions and local regulations.

Consignes de sécurité

- La sécurité de ce produit repose sur des tests et des agréations portant sur sa conception d'origine et sur des composants particuliers. Le fabricant n'assume aucune responsabilité concernant la sécurité en cas d'utilisation de pièces de rechange non agréées.
- Les consignes d'entretien et de réparation de ce produit s'adressent uniquement à un personnel de maintenance qualifié.
- Le démontage et l'entretien de ce produit pouvant présenter certains risques électriques, le personnel d'entretien qualifié devra prendre toutes les précautions nécessaires.

AVERTISSEMENT—RISQUE DE BLESSURE

La batterie lithium de ce produit n'est pas destinée à être remplacée. Il existe un risque d'explosion si une batterie lithium est placée de façon incorrecte. Ne rechargez pas, ne démontez pas et n'incinérez pas une batterie lithium. Mettez les batteries lithium usagées au rebut selon les instructions du fabricant et les réglementations locales.

Norme di sicurezza

- La sicurezza del prodotto si basa sui test e sull'approvazione del progetto originale e dei componenti specifici. Il produttore non è responsabile per la sicurezza in caso di sostituzione non autorizzata delle parti.
- Le informazioni riguardanti la manutenzione di questo prodotto sono indirizzate soltanto al personale di assistenza autorizzato.
- Durante lo smontaggio e la manutenzione di questo prodotto, il rischio di subire scosse elettriche e danni alla persona è più elevato. Il personale di assistenza autorizzato deve, quindi, adottare le precauzioni necessarie.

ATTENZIONE — PERICOLO DI LESIONI

La batteria al litio presente del prodotto non deve essere sostituita. In caso di sostituzione errata della batteria al litio, potrebbe verificarsi un'esplosione. Non ricaricare, smontare o bruciare batterie al litio. Smaltire le batterie al litio usate seguendo le istruzioni del produttore e le norme locali.

Sicherheitshinweise

- Die Sicherheit dieses Produkts basiert auf Tests und Zulassungen des ursprünglichen Modells und bestimmter Bauteile. Bei Verwendung nicht genehmigter Ersatzteile wird vom Hersteller keine Verantwortung oder Haftung für die Sicherheit übernommen.
- Die Wartungsinformationen für dieses Produkt sind ausschließlich für die Verwendung durch einen Wartungsfachmann bestimmt.
- Während des Auseinandernehmens und der Wartung des Geräts besteht ein zusätzliches Risiko eines elektrischen Schlags und körperlicher Verletzung. Das zuständige Fachpersonal sollte entsprechende Vorsichtsmaßnahmen treffen.

VORSICHT - VERLETZUNGSGEFAHR

Die Lithiumbatterie in diesem Produkt darf nicht ausgetauscht werden. Wird eine Lithiumbatterie nicht ordnungsgemäß ausgetauscht, besteht Explosionsgefahr. Lithiumbatterien dürfen auf keinen Fall wieder aufgeladen, auseinander genommen oder verbrannt werden. Befolgen Sie zum Entsorgen verbrauchter Lithiumbatterien die Anweisungen des Herstellers und die örtlichen Bestimmungen.

Pautas de Seguridad

- La seguridad de este producto se basa en pruebas y aprobaciones del diseño original y componentes específicos. El fabricante no es responsable de la seguridad en caso de uso de piezas de repuesto no autorizadas.
- La información sobre el mantenimiento de este producto está dirigida exclusivamente al personal cualificado de mantenimiento.
- Existe mayor riesgo de descarga eléctrica y de daños personales durante el desmontaje y la reparación de la máquina. El personal cualificado debe ser consciente de este peligro y tomar las precauciones necesarias.

PRECAUCIÓN: POSIBLES DAÑOS PERSONALES

La batería de litio de este producto no debe reemplazarse. Existe riesgo de explosión si se sustituye incorrectamente una batería de litio. No recargue, desmonte ni incinere una batería de litio. Deseche las baterías de litio según las instrucciones del fabricante y las normativas locales.

Informações de Segurança

- A segurança deste produto baseia-se em testes e aprovações do modelo original e de componentes específicos. O fabricante não é responsável pela segunrança, no caso de uso de peças de substituição não autorizadas.
- As informações de segurança relativas a este produto destinam-se a profissionais destes serviços e não devem ser utilizadas por outras pessoas.
- Risco de choques eléctricos e ferimentos graves durante a desmontagem e manutenção deste produto. Os profissionais destes serviços devem estar avisados deste facto e tomar os cuidados necessários.

ATENÇÃO — RISCO DE FERIMENTO

A bateria de lítio neste produto não deve ser substituída. Existe o risco de explosão se uma bateria de lítio for substituída incorretamente. Não recarregue, desmonte ou incinere uma bateria de lítio. Descarte as baterias de lítio usadas de acordo com as instruções do fabricante e regulamentos locais.

Informació de Seguretat

- La seguretat d'aquest producte es basa en l'avaluació i aprovació del disseny original i els components específics. El fabricant no es fa responsable de les qüestions de seguretat si s'utilitzen peces de recanvi no autoritzades.
- La informació pel manteniment d'aquest producte està orientada exclusivament a professionals i no està destinada a ningú que no ho sigui.
- El risc de xoc elèctric i de danys personals pot augmentar durant el procés de desmuntatge i de servei d'aquest producte. El personal professional ha d'estar-ne assabentat i prendre les mesures convenients.

ATENCIÓ

La bateria de liti d'aquest producte no ha estat dissenyada perquè es substitueixi. Hi ha perill d'explosió si no es substitueix correctament la bateria de liti. No recarregueu, desmunteu o incinereu una bateria de liti. Desfeu-vos de les bateries de liti usades d'acord amb les instruccions del fabricant i les regulacions locals.

안전 사항

- 본 제품은 원래 설계및특정 구성에 대한 테스트 결과로 안정 성이 입증된 것입니다. 따라서 무허가 교체부품을 사용하는 경 우 에는 제조업체에서 안전에 대한 책임을 지지 않습니다.
- 본 제품에 관한 유지 보수 설명 서는 전문 서비스 기술자 용으로 작성된 것이므로, 비 전문가는 사용할 수 없습니다.
- 본 제품을 해체하거나 정비할 경우, 전 기전 인 충 경 을 받거나 상 처를 입을 위험이 커집니다. 전문 서비스 기술자는 이 사실을 숙지하고, 필요한 예방조치를 취하도록 하십시오.

주의—부상 위험

이 제품에 들어 있는 리튬 배터리는 교체할 수 없습니다. 리튬 배터리를 잘못 교체하면 폭발할 위험이 있습니다. 리튬 배터리를 재충전하거나, 분해하거나, 태우지 마십시오. 제조업체의 지침과 지역 규정에 따라 다 쓴 리튬 배터리를 폐기하십시오.

安全信息

- 本产品的安全性以原来设计和特定产品的测试结果和认证为基础。万一使用来经许可的替换部件，制造商不对安全性负责。
- 本产品的维护信息仅供专业服务人员使用，并不打算证其他人使用。
- 本产品在拆卸、维修时，遭受电击或人员受伤的危险性会增高，专业服务人员对这点必须有所了触，并采取必要的预防措施。

当心—可能的伤害：

本产品中的锂电池不可更换。如果不正确更换锂电池，可能会有爆炸危险。不要再 充电、拆解或焚烧锂电池。丢弃旧的锂电池时应按照制造商的指导及当地法规进行处理。

Preface

This manual contains maintenance procedures for service personnel.

It is divided into the following chapters:

- **General information** contains a general description of the printer. Special tools and test equipment are discussed.
- **Diagnostic information** contains diagnostic aids you can use to isolate failing FRUs. These diagnostic aids include error code tables, symptom tables, and service checks.
- **Service menus** contains descriptions of the printer interface, the user and service menus.
- **Repair information** provides instructions for making printer adjustments and removing and installing FRUs.
- **Component locations** uses illustrations to identify the basic printer parts.
- **Maintenance** contains the lubrication specifications and recommendations to prevent problems.
- **Parts catalog** contains illustrations and part numbers for individual FRUs.
- **Appendix A** contains detailed specifications about the product.
- **Appendix B** contains the available options and other features of the product.
- **Appendix C** contains the theory of operation.
- **Appendix D** contains the list of acronyms in the manual and their meanings.

Service manual conventions

Note: A *note* provides additional information.

Warning—Potential Damage: A *warning* identifies something that might damage the product hardware or software.

This service manual uses several different types of caution statements:

CAUTION—POTENTIAL INJURY: A *caution* identifies something that might cause the service technician harm.

CAUTION—SHOCK HAZARD: This type of caution indicates a danger from hazardous voltage in the area of the product where you are working. Unplug the product before you start working, or use caution if the product must receive power to perform the task.

CAUTION—HOT SURFACE: This type of caution indicates a hot surface.

Change history

February 4, 2013

- 10.xx and 24x.08 errors were added to the User attendance messages table.
- 24x.08 errors were added to the 24x paper jams and Input option jam error messages tables.
- New topic for updating the firmware was added to the Service menus chapter.
- BSD machines were added to the list of models under the General information chapter.

General information

The Lexmark™ MX310dn, MX410, and MX510 (7015-xxx) are network-capable, multi-function laser printers that print monochrome print jobs. All information in this service manual pertains to all models unless explicitly noted.

The printers are available in the following models:

Model	Configurations	Machine type / model
MX310dn	Mono laser MFP, Networking/Fax, Duplex print, Simplex scan	7015-270
MX410de	Mono laser MFP, Networking/Fax, Duplex print/scan, 4.3-inch color touch screen	7015-470
XM1140		7015-479
MX510de	Mono laser MFP, Networking/No fax, Duplex print/scan, 4.3-inch color touch screen	7015-630
MX511de	Mono laser MFP, Networking/Fax, Duplex print/scan, e-Task 4.3-inch color touch screen	7015-670
XM1145		7015-679
MX511dhe	Mono laser MFP, Networking/Fax, Duplex print/scan, e-Task 4.3-inch color touch screen, Hard drive	7015-675

The diagnostic information in this manual leads you to the correct field replaceable unit (FRU) or part. Use the error code charts, symptom index, and service checks to determine the symptom and then repair the failure. After you complete the repair, perform tests as needed to verify the repair.

To begin diagnosing a problem, go to **"Diagnostic information" on page 35**. See **"Repair information" on page 189** for information about removing and reinstalling parts. See **"Parts catalog" on page 354** to help identify parts.

Media guidelines

Additional information for printing on specialty media may be found in the *Cardstock and Label Guide* available at **http://support.lexmark.com**.

Paper guidelines

Selecting the correct paper or specialty media reduces printing problems. For the best print quality, try a sample of the paper or specialty media before buying large quantities.

Paper characteristics

The following paper characteristics affect print quality and reliability. Consider these characteristics when evaluating new paper stock.

Weight

The printer trays can automatically feed paper weights up to 120-g/m^2 (32-lb) bond grain long paper. The multipurpose feeder can automatically feed paper weights up to 163-g/m^2 (43-lb) bond grain long paper. Paper lighter than 60 g/m^2 (16 lb) might not be stiff enough to feed properly, causing jams. For best performance, use 75-g/m^2 (20-lb) bond grain long paper. For paper smaller than 182 x 257 mm (7.2 x 10.1 inches), we recommended to use 90 g/m^2 (24 lb) or heavier paper.

Note: Two-sided printing is supported only for 60–90-g/m^2 (16–24-lb) bond paper.

Curl

Curl is the tendency for paper to curl at its edges. Excessive curl can cause paper feeding problems. Curl can occur after the paper passes through the printer, where it is exposed to high temperatures. Storing paper unwrapped in hot, humid, cold, or dry conditions, even in the trays, can contribute to paper curling prior to printing and can cause feeding problems.

Smoothness

Paper smoothness directly affects print quality. If paper is too rough, then toner cannot fuse to it properly. If paper is too smooth, then it can cause paper feeding or print quality issues. Always use paper between 100 and 300 Sheffield points; however, smoothness between 150 and 250 Sheffield points produces the best print quality.

Moisture content

The amount of moisture in paper affects both print quality and the ability of the printer to feed the paper correctly. Leave paper in its original wrapper until it is time to use it. This limits the exposure of paper to moisture changes that can degrade its performance.

Store paper in its original wrapper in the same environment as the printer for 24 to 48 hours before printing. Extend the time to several days if the storage or transportation environment is very different from the printer environment. Thick paper may also require a longer conditioning period.

Grain direction

Grain refers to the alignment of the paper fibers in a sheet of paper. Grain is either *grain long*, running the length of the paper, or *grain short*, running the width of the paper.

For 60–90-g/m^2 (16–24-lb) bond paper, grain long paper is recommended.

Fiber content

Most high-quality xerographic paper is made from 100% chemically treated pulped wood. This content provides the paper with a high degree of stability resulting in fewer paper feeding problems and better print quality. Paper containing fibers such as cotton can negatively affect paper handling.

Unacceptable paper

The following paper types are not recommended for use with the printer:

- Chemically-treated papers used to make copies without carbon paper, also known as carbonless papers, carbonless copy paper (CCP), or no carbon required (NCR) paper
- Preprinted papers with chemicals that may contaminate the printer
- Preprinted papers that can be affected by the temperature in the printer fuser

- Preprinted papers that require a registration (the precise print location on the page) greater than ±2.4 mm (±0.9 inch), such as optical character recognition (OCR) forms

  In some cases, registration can be adjusted with a software application to successfully print on these forms:
- Coated papers (erasable bond), synthetic papers, thermal papers
- Rough-edged, rough or heavily textured surface papers, or curled papers
- Recycled papers that fail EN12281:2002 (European)
- Paper weighing less than 60 g/m^2 (16 lb)
- Multiple-part forms or documents

Selecting paper

Using the appropriate paper prevents jams and helps ensure trouble-free printing.

To help avoid paper jams and poor print quality:

- *Always* use new, undamaged paper.
- Before loading paper, know the recommended printable side of the paper. This information is usually indicated on the paper package.
- *Do not* use paper that has been cut or trimmed by hand.
- *Do not* mix paper sizes, types, or weights in the same tray; mixing results in jams.
- *Do not* use coated papers unless they are specifically designed for electrophotographic printing.

Selecting preprinted forms and letterhead

Use these guidelines when selecting preprinted forms and letterhead:

- Use grain long for 60 to 90 g/m^2 (16 to 24 lb) weight paper.
- Use only forms and letterhead printed using an offset lithographic or engraved printing process.
- Avoid papers with rough or heavily textured surfaces.

Use papers printed with heat-resistant inks designed for use in xerographic copiers. The ink must be able to withstand temperatures up to 230°C (446°F) without melting or releasing hazardous emissions. Use inks that are not affected by the resin in toner. Inks that are oxidation-set or oil-based generally meet these requirements; latex inks might not. When in doubt, contact the paper supplier.

Preprinted papers such as letterhead must be able to withstand temperatures up to 230°C (446°F) without melting or releasing hazardous emissions.

Storing paper

Use these paper storage guidelines to help avoid jams and uneven print quality:

- For best results, store paper where the temperature is 21°C (70°F) and the relative humidity is 40 percent. Most label manufacturers recommend printing in a temperature range of 18–24°C (65–75°F) with relative humidity between 40 and 60 percent.
- Store paper in cartons, on a pallet or shelf, rather than on the floor.
- Store individual packages on a flat surface.

- Do not store anything on top of individual paper packages.
- Take paper out of the carton or wrapper only when you are ready to load it in the printer. The carton and wrapper help keep the paper clean, dry, and flat.

Using recycled paper and other office papers

As an environmentally conscious company, Lexmark supports the use of recycled office paper produced specifically for use in laser (electrophotographic) printers. In 1998, Lexmark presented to the US government a study demonstrating that recycled paper produced by major mills in the US fed as well as non-recycled paper. However, no blanket statement can be made that *all* recycled paper will feed well.

Lexmark consistently tests its printers with recycled paper (20–100% post-consumer waste) and a variety of test paper from around the world, using chamber tests for different temperature and humidity conditions. Lexmark has found no reason to discourage the use of today's recycled office papers, but generally the following property guidelines apply to recycled paper.

- Low moisture content (4–5%)
- Suitable smoothness (100–200 Sheffield units, or 140–350 Bendtsen units, European)

  Note: Some much smoother papers (such as premium 24 lb laser papers, 50–90 Sheffield units) and much rougher papers (such as premium cotton papers, 200–300 Sheffield units) have been engineered to work very well in laser printers, despite surface texture. Before using these types of paper, consult your paper supplier.
- Suitable sheet-to-sheet coefficient of friction (0.4–0.6)
- Sufficient bending resistance in the direction of feed

Recycled paper, paper of lower weight (<60 g/m^2 [16 lb bond]) and/or lower caliper (<3.8 mils [0.1 mm]), and paper that is cut grain-short for portrait (or short-edge) fed printers may have lower bending resistance than is required for reliable paper feeding. Before using these types of paper for laser (electrophotographic) printing, consult your paper supplier. Remember that these are general guidelines only and that paper meeting these guidelines may still cause paper feeding problems in any laser printer (for example, if the paper curls excessively under normal printing conditions).

Using specialty media

Tips on using card stock

Card stock is heavy, single-ply specialty media. Many of its variable characteristics, such as moisture content, thickness, and texture, can significantly impact print quality. Print samples on the card stock being considered for use before buying large quantities.

- From the Paper menu, set the Paper Type to Card Stock.
- Select the appropriate Paper Texture setting.
- Be aware that preprinting, perforation, and creasing may significantly affect the print quality and cause jams or other paper handling problems.
- Check with the manufacturer or vendor to ensure the card stock can withstand temperatures up to 220°C (446°F) without releasing hazardous emissions.
- Do not use preprinted card stock manufactured with chemicals that may contaminate the printer. Preprinting introduces semi-liquid and volatile components into the printer.
- Use grain short card stock when possible.

Tips on using envelopes

Print samples on the envelopes being considered for use before buying large quantities.

- Use envelopes designed specifically for laser/LED printers. Check with the manufacturer or vendor to ensure that the envelopes can withstand temperatures up to 220°C (446°F) without sealing, wrinkling, curling excessively, or releasing hazardous emissions.
- For best performance, use envelopes made from 90 g/m^2 (24 lb bond) paper or 25% cotton. All-cotton envelopes must not exceed 70 g/m^2 (20 lb bond) weight.
- Use only new envelopes from undamaged packages.
- To optimize performance and minimize jams, do not use envelopes that:
  - Have excessive curl or twist
  - Are stuck together or damaged in any way
  - Have windows, holes, perforations, cutouts, or embossing
  - Have metal clasps, string ties, or folding bars
  - Have an interlocking design
  - Have postage stamps attached
  - Have any exposed adhesive when the flap is in the sealed or closed position
  - Have bent corners
  - Have rough, cockle, or laid finishes
- Adjust the width guides to fit the width of the envelopes.

Note: A combination of high humidity (over 60%) and the high printing temperature may wrinkle or seal envelopes.

Tips on using labels

Print samples on the labels being considered for use before buying large quantities.

Note: Use only paper label sheets. Vinyl, pharmacy, and two-sided labels are not supported.

For more information on label printing, characteristics, and design, see the *Card Stock & Label Guide* available at **http://support.lexmark.com**.

When printing on labels:

- Use labels designed specifically for laser printers. Check with the manufacturer or vendor to verify that:
  - The labels can withstand temperatures up to 230°C (446°F) without sealing, excessive curling, wrinkling, or releasing hazardous emissions.
  - Label adhesives, face sheet (printable stock), and topcoats can withstand up to 25-psi (172-kPa) pressure without delaminating, oozing around the edges, or releasing hazardous fumes.
- Do not use labels with slick backing material.
- Use full label sheets. Partial sheets may cause labels to peel off during printing, resulting in a jam. Partial sheets also contaminate the printer and the cartridge with adhesive, and could void the printer and toner cartridge warranties.
- Do not use labels with exposed adhesive.
- Do not print within 1 mm (0.04 inches) of the edge of the label, of the perforations, or between die-cuts of the label.

- Make sure the adhesive backing does not reach to the edge of the sheet. Zone coating of the adhesive should be at least 1 mm (0.04 inches) away from edges. Adhesive material contaminates the printer and could void the warranty.
- If zone coating of the adhesive is not possible, then remove a 2-mm (0.06-inches) strip on the leading and driver edge, and use a non-oozing adhesive.
- Portrait orientation is recommended, especially when printing bar codes.

Tips on using letterhead

- Use letterhead designed specifically for laser printers.
- Print samples on the letterhead being considered for use before buying large quantities.
- Before loading letterhead, flex, fan, and straighten the stack to prevent sheets from sticking together.
- Page orientation is important when printing on letterhead.

Tips on using transparencies

- Print a test page on the transparencies being considered for use before buying large quantities.
- Feed transparencies from the standard tray, or the multipurpose feeder.
- Use transparencies designed specifically for laser printers. Transparencies must be able to withstand temperatures up to 185°C (365°F) without melting, discoloring, offsetting, or releasing hazardous emissions.

  Note: If the transparency weight is set to Heavy and the transparency texture is set to Rough in the Paper menu, then transparencies can be printed at a temperature up to 195°C (383°F).
- Avoid getting fingerprints on the transparencies to prevent print quality problems.
- Before loading transparencies, flex, fan, and straighten the stack to prevent sheets from sticking together.

Supported paper sizes, types, and weights

Supported paper sizes

Paper size and dimension	Standard 250-sheet tray	Optional 250- or 550-sheet tray	Multipurpose feeder	ADF	Scanner glass	Duplex mode
Business card	X	X	X	X	✓	X
3 x 5 in.	X	X	✓	X	✓	X
4 x 6 in.	X	X	✓	X	✓	X
A4 210 x 297 mm (8.27 x 11.7 in.)	✓	✓	✓	✓	✓	✓
A5 148 x 210 mm (5.83 x 8.27 in.)	✓	✓	✓	✓	✓	X
* Universal is supported in duplex mode only if the width is at least 210 mm (8.27 in.) and the length is at least 279.4 mm (11 in.). The smallest supported Universal size is supported only in the multipurpose feeder.						

Paper size and dimension	Standard 250-sheet tray	Optional 250- or 550-sheet tray	Multipurpose feeder	ADF	Scanner glass	Duplex mode
A6 105 x 148 mm (4.13 x 5.83 in.)	✓	X	✓	✓	✓	X
JIS B5 182 x 257 mm (7.17 x 10.1 in.)	✓	✓	✓	✓	✓	X
Letter 215.9 x 279.4 mm (8.5 x 11 in.)	✓	✓	✓	✓	✓	✓
Legal 215.9 x 355.6 mm (8.5 x 14 in.)	✓	✓	✓	✓	✓	✓
Executive 184.2 x 266.7 mm (7.25 x 10.5 in.)	✓	✓	✓	✓	✓	X
Oficio (México) 215.9 x 340.4 mm (8.5 x 13.4 in.)	✓	✓	✓	✓	X	✓
Folio 215.9 x 330.2 mm (8.5 x 13 in.)	✓	✓	✓	✓	X	✓
Statement 139.7 x 215.9 mm (5.5 x 8.5 in.)	✓	✓	✓	✓	✓	X
Universal* 76.2 x 127 mm (3 x 5 in.) to 215.9 x 359.92 mm (8.5 x 14.17 in.)	✓	✓	✓	✓	✓	✓
7 3/4 Envelope (Monarch) 98.4 x 190.5 mm (3.875 x 7.5 in.)	X	X	✓	X	X	X
9 Envelope 98.4 x 226.1 mm (3.875 x 8.9 in.)	X	X	✓	X	X	X
10 Envelope 104.8 x 241.3 mm (4.12 x 9.5 in.)	X	X	✓	X	X	X

* Universal is supported in duplex mode only if the width is at least 210 mm (8.27 in.) and the length is at least 279.4 mm (11 in.). The smallest supported Universal size is supported only in the multipurpose feeder.

Paper size and dimension	Standard 250-sheet tray	Optional 250- or 550-sheet tray	Multipurpose feeder	ADF	Scanner glass	Duplex mode
DL Envelope 110 x 220 mm (4.33 x 8.66 in.)	X	X	✓	X	X	X
C5 Envelope 162 x 229 mm (6.38 x 9.01 in.)	X	X	✓	X	X	X
B5 Envelope 176 x 250 mm (6.93 x 9.84 in.)	X	X	✓	X	X	X
Other Envelope 85.7 x 165 mm to 215.9 x 355.6 mm (3.375 x 6.50 in. to 8.5 x 14 in.)	X	X	✓	X	X	X

* Universal is supported in duplex mode only if the width is at least 210 mm (8.27 in.) and the length is at least 279.4 mm (11 in.). The smallest supported Universal size is supported only in the multipurpose feeder.

Supported paper types and weights

The standard tray supports 60–90-g/m^2 (16–24-lb) paper weights. The optional tray supports 60–120-g/m^2 (16–32-lb) paper weights. The multipurpose feeder supports 60–163-g/m^2 (16–43-lb) paper weights.

Paper type	250- or 550-sheet tray	Multipurpose feeder	Duplex mode	ADF	Scanner glass
Plain paper	✓	✓	✓	✓	✓
Card stock	X	✓	X	✓	✓
Transparencies	✓	✓	X	✓	✓
Recycled	✓	✓	✓	✓	✓
Paper labels[1]	✓	✓	X	✓	✓
Bond	✓	✓	✓	✓	✓
Envelope[2]	X	✓	X	X	✓
Rough envelope	X	✓	X	X	✓
Letterhead	✓	✓	✓	✓	✓
Preprinted	✓	✓	✓	✓	✓

[1] One-sided paper labels designed for laser printers are supported for occasional use. We recommend printing only up to 20 pages of paper labels per month. Vinyl, pharmacy, and two-sided labels are not supported.

[2] Use envelopes that lie flat when individually placed on a table facedown.

Paper type	250- or 550-sheet tray	Multipurpose feeder	Duplex mode	ADF	Scanner glass
Colored paper	✓	✓	✓	✓	✓
Light paper	✓	✓	✓	✓	✓
Heavy paper	✓	✓	✓	✓	✓
Rough/Cotton	✓	✓	X	✓	✓
Custom Type [x]	✓	✓	✓	✓	✓

[1] One-sided paper labels designed for laser printers are supported for occasional use. We recommend printing only up to 20 pages of paper labels per month. Vinyl, pharmacy, and two-sided labels are not supported.

[2] Use envelopes that lie flat when individually placed on a table facedown.

Data security notice

This printer contains various types of memory that are capable of storing device and network settings, information from embedded solutions, and user data. The types of memory, along with the types of data stored by each, are described below.

- Volatile memory—This device utilizes standard Random Access Memory (RAM) to temporarily buffer user data during simple print and copy jobs.
- Non-volatile memory—This device may utilize two forms of non-volatile memory: EEPROM and NAND (flash memory). Both types are used to store the operating system, device settings, network information, scanner and bookmark settings, and embedded solutions.
- Hard disk memory—Some devices have a hard disk drive installed. The printer hard disk is designed for device-specific functionality and cannot be used for long term storage for data that is not print-related. The hard disk does not provide the capability for users to extract information, create folders, create disk or network file shares, or transfer FTP information directly from a client device. The hard disk can retain buffered user data from complex print jobs, as well as form data and font data.

To erase volatile memory, turn off the printer.

To erase non-volatile memory, see the menu item under **"Configuration menu" on page 174** pertaining to this.

To erase the printer hard disk, see the menu item under **"Configuration menu" on page 174** pertaining to this.

The following parts are capable of storing memory:

- printer control panel
- UICC (User Interface Controller Card)
- controller board
- optional hard drives

Note: The printer control panel and controller board contain NVRAM.

After removing the old part, it must be returned to your next level of support.

Tools required for service

Flat-blade screwdrivers, various sizes
#1 Phillips screwdriver, magnetic
#2 Phillips screwdriver, magnetic
#2 Phillips screwdriver, magnetic short-blade
Needle-nose pliers
Diagonal side cutters
Spring hook
Feeler gauges
Analog or digital multimeter
Flashlight (optional)

Diagnostic information

CAUTION—SHOCK HAZARD: Remove the power cord from the electrical outlet before you connect or disconnect any cable or electronic card or assembly for personal safety and to prevent damage to the printer. Disconnect any connections between the printer and PCs/peripherals.

CAUTION—POTENTIAL INJURY: The printer weight is greater than 18kg (40 lb) and requires two or more trained personnel to lift it safely. Use the hand holds on the side of the printer. Make sure your fingers are not under the printer when you lift or set the printer on the floor or another stable surface.

CAUTION—HOT SURFACE: The inside of the printer might be hot. To reduce the risk of injury from a hot component, allow the surface to cool before touching it.

Troubleshooting overview

Performing the initial troubleshooting check

Before you start the troubleshooting procedures, perform the following checks:

- With the power cord unplugged from the wall outlet, check that the cord is free from breakage, short-circuits, disconnected wires, or incorrect connections.
- Make sure the printer is properly grounded. Check the power cord ground terminal.
- Make sure the power supply line voltage is within 10% of the rated line voltage.
- Make sure the machine is securely installed on a level surface in a well-ventilated area.
- Make sure the room temperature is between 16 and 32°C (60 and 90°F) and that the relative humidity is between 20 and 80%.
- Avoid sites generating ammonia gas, high temperature, high humidity (near water faucets, kettles, humidifiers), cold spaces, near open flames, and dusty areas.
- Avoid sites exposed to direct sunlight.
- Make sure the paper is the recommended paper for this printer.
- Make a trial print with paper from a newly opened package, and check the result.

Power-on Reset (POR) sequence

When you turn the printer on, it performs a POR sequence.

Check for correct POR functioning of the base printer by observing the following:

1. The control panel indicator light turns on.
2. The control panel display turns on.
3. A splash screen appears on the display.
4. The cooling fan turns on.
5. The fuser heater turns on.

   Note: The fuser takes longer to warm up from a cold start than a warm start.
6. The main drive motor turns on.
7. The EP drive assembly drives the developer shaft located in the imaging unit.
8. The exit rollers turn.
9. The control panel indicator light blinks.
10. `Ready` appears on the display.

Using Safe Mode

Safe Mode lets the printer continue to operate in a special limited mode in which it attempts to continue offering as much functionality as possible despite known issues.

Warning—Potential Damage: Safe Mode is intended as a short-term workaround and should be used only in the case of a non-critical error when a print job must be completed before service can be arranged to repair the printer. The printer must be returned to standard operating mode before diagnostics can be run or full-function printing can continue.

You can enter Safe Mode in one of the following ways:

- Enable Safe Mode from the Configuration menu, and then POR the printer.
- Press the **Stop** and **Back** keys, and then POR the printer.

Return the printer to standard operating mode to service the printer and return to full-function printing.

Safe Mode print behavior

The following table outlines the behavior for this printer model while in Safe Mode:

Safe Mode engine features	Engine behavior	Control panel behavior
Simplex printing only	Will report that no duplexer is installed.	Duplex print option will not be selectable.
Ignore duplex sensor		
Ignore bin full sensor	Bin full messages will not be reported.	Bin full messages will not occur.
Print at narrow media operating point	Pages will be printed slower.	N/A
Ignore narrow media sensor	Narrow media will print without restrictions.	N/A

Safe Mode engine features	Engine behavior	Control panel behavior
Ignore all input options	Will report that only Tray 1 is installed.	Only Tray 1 and the MPF will be selectable.
Ignore all output options	Will not report any installed finishing options.	Finishing options will not be selectable.
Use large interpage gaps	Pages will have large interpage gaps.	N/A

Fixing print quality issues

The symptoms described in this chapter might require replacement of one or more CRUs (Customer Replaceable Units) designated as supplies or maintenance items, which are the responsibility of the customer. With the customer's permission, you might need to install a developer (toner) cartridge.

Initial print quality check

Before troubleshooting specific print problems, complete the following initial print quality check:

1. The printer must be in a location that follows the recommended operating environment specifications. See **"Operating environment" on page 380**.
2. Check the life status of all supplies. Any supply that is low should be replaced.
3. Load 20-lb plain letter or A4 paper. Make sure the paper guides are properly set and locked. From the control panel, set the paper size and type to match the paper loaded in the tray.
4. Print a Menu settings page. Be sure to keep the original Menu settings page to restore the customer's custom settings if needed.
5. Verify on the Menu settings page if the following are set to their default values:
   - Print resolution: 600 dpi
   - Toner darkness: 8
6. Inspect the transfer roll for damage. Replace if damaged.
7. Inspect the toner cartridge and imaging unit for damage. Replace if damaged.
8. Print the Print quality pages to see if the problem remains. Use Tray 1 to test print quality problems.

9 Print a Print quality test page, and then look for variations in the print from what is expected. Verify if the settings under EP Setup are set to their default values. See **"EP Defaults" on page 166**.

10 Check to ensure the correct printer driver for the installed software is being used. An incorrect printer driver for the installed software can cause problems. Incorrect characters could print, and the copy may not fit the page correctly.

Gray background or toner fog on prints

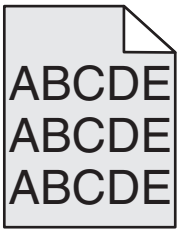

Actions	Yes	No
Step 1 Check the cartridge plunger. Is the cartridge plunger properly attached to the front door and is the spring functioning properly?	Go to step 2.	Replace the cartridge plunger. See **"Cartridge plunger removal" on page 244**.
Step 2 Remove any contamination from the CTLS contacts. Perform a print test. Does the problem remain?	Go to step 3.	The problem is solved.
Step 3 Check the CTLS for damage. Is it free of damage?	Go to step 4.	Replace the printer.
Step 4 Check the transfer roll for surface contamination or excessive wear. Is it free of contamination and wear?	Go to step 5.	Replace the transfer roll. See **"Transfer roll removal" on page 243**.
Step 5 Check the transfer roll left contact spring for damage. Is it free of damage?	Replace the power supply. See **"Power supply removal" on page 272**.	Replace the printer.

Repeating defects

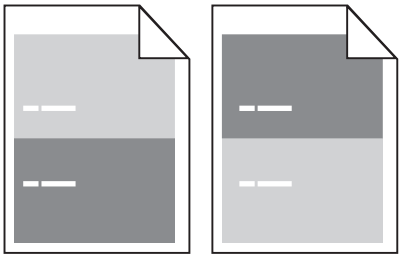

Actions	Yes	No
Step 1 Measure the distance between defects. Is the distance between defects equal to any of the following? • 3.82 in. (97 mm) • 1.85 in. (47 mm) • 1.5 in. (38 mm)	Replace the imaging unit.	Go to step 2.
Step 2 Is the distance between defects equal to 3.15 in. (80 mm)?	Replace the fuser. See **"Fuser removal" on page 305**.	Contact the next level of support.

Printer is printing blank pages

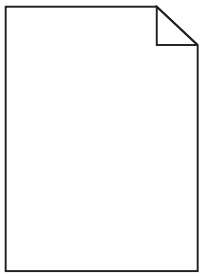

Actions	Yes	No
Step 1 Check the toner cartridge level. Is the toner level low?	Replace the toner cartridge.	Go to step 2.
Step 2 Check the imaging unit for wear or damage. Is it free of wear or damage?	Go to step 3.	Replace the imaging unit.
Step 3 Check the transfer roll for surface contamination or excessive wear. Is it free of contamination and wear?	Go to step 4.	Replace the transfer roll.

Actions	Yes	No
Step 4 Check the transfer roll left contact spring for damage. Is it free of damage?	Go to step 5.	Replace the printer.
Step 5 Reseat the cables JLSU1 and J6 on the controller board. Does the problem remain?	Replace the power supply.	The problem is solved.

Printer is printing solid black pages

Actions	Yes	No
Step 1 Check the imaging unit for damage. Is it free of damage?	Go to step 2.	Replace the imaging unit.
Step 2 Remove any contamination from the imaging unit contacts. Does the problem remain?	Go to step 3.	The problem is solved.
Step 3 Check the imaging unit contacts for damage. Are they free of damage?	Replace the power supply. See **“Power supply removal” on page 272**.	Replace the printer.

Shadow images appear on prints

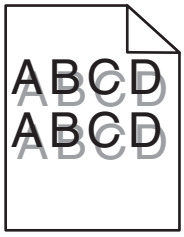

Actions	Yes	No
Step 1 Does the shadow image appear every two pages?	Go to step 2.	Go to step 3.
Step 2 Check the redrive assembly for wear or damage. Is it free of wear or damage?	Go to step 3.	Replace the redrive assembly. See **"Redrive assembly removal" on page 304**.
Step 3 Check the transfer roll for surface contamination or excessive wear. Is it free of contamination and wear?	Go to step 4.	Replace the transfer roll. See **"Transfer roll removal" on page 243**.
Step 4 Check the following fuser components for wear or damage: • Gears • Exit rollers • Belt fuser Are they free of damage?	Go to step 5.	Replace the fuser. See **"Fuser removal" on page 305**.
Step 5 **a** Turn off the printer. **b** Remove the rear door and cover. **c** Disconnect the fuser cable connected to PCN5 of the power supply. **d** Check for approximate correct resistance on the fuser cable: • 220V fuser—43 ohms • 110V fuser—10 ohms • 100V fuser—8 ohms Is the resistance equal to any of the above values?	The problem is solved.	Replace the fuser. See **"Fuser removal" on page 305**.

Skewed print

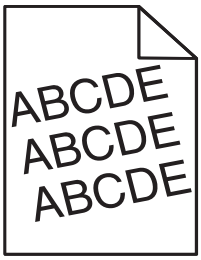

Actions	Yes	No
Step 1 **a** POR into the Diagnostics menu and perform a print test: **Diagnostics Menu** > **Print Tests** > **Tray 1** **b** Adjust the margins if necessary: **Diagnostics Menu** > **Registration** Does the error remain?	Go to step 2.	The problem is solved.
Step 2 Does the skew appear every two pages?	Go to step 9.	Go to step 3.
Step 3 **a** Check the media source. **b** If the media is from tray 1, go to step 4. If the media is from the MPF, go to step 6.		
Step 4 Make sure the pick tires are free of debris. Check for wear or damage. Are they free of wear or damage?	Go to step 5.	Replace the pick tires.
Step 5 Check the lift plate on the input tray for damage. Is it free of damage?	Go to step 11.	Replace the input tray.
Step 6 Make sure the MPF pick roller and separator pad are free of debris. Check for wear or damage. Are they free of wear or damage?	Go to step 7.	Replace the MPF pick roller and separator pad. See **"MPF pick roller removal" on page 263** and **"Separator pad removal" on page 269**.
Step 7 Check the MPF gearbox for wear or damage. Is it free of wear or damage?	Go to step 8.	Replace the MPF gearbox. See **"MPF gearbox removal" on page 215**.
Step 8 Make sure the front input guide rollers are free of debris. Check for wear or damage. Are they free of wear or damage?	Go to step 11.	Replace the front input guide. See **"Front input guide removal" on page 267**.
Step 9 Make sure the redrive rollers are free of debris. Check for wear or damage. Are they free of wear or damage?	Go to step 10.	Replace the redrive assembly. See **"Redrive assembly removal" on page 304**.

Actions	Yes	No
Step 10 **a** Remove the left cover. **b** POR into the Diagnostics menu and perform a duplex test: **Diagnostics Menu** > **Duplex Tests** **c** Observe the reverse solenoid for proper operation. Does it properly operate?	Go to step 11.	Replace the reverse solenoid. See **"Reverse solenoid removal" on page 218**.
Step 11 Make sure the input roller/deskew assembly is free of debris. Check for wear or damage. Are they free of wear or damage?	Contact the next level of support.	Replace the printer.

Streaked horizontal or vertical lines appear on prints

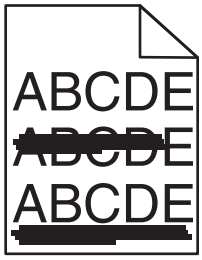

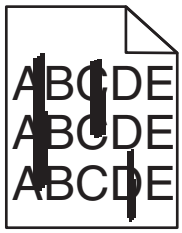

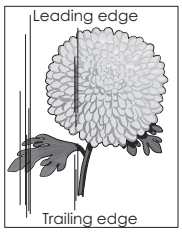

Actions	Yes	No
Step 1 Check the imaging unit for wear or damage. Is it free of wear or damage?	Go to step 2.	Replace the imaging unit.
Step 2 Make sure the paper path is free of debris or toner contamination. Does the problem remain?	Go to step 3.	The problem is solved.
Step 3 Check the transfer roll for contamination or excessive wear. Is it free of contamination or wear?	Go to step 4.	Replace the transfer roll.

Actions	Yes	No
Step 4 Remove the fuser and check for damage or debris on the rollers and belts. Is it free of damage and debris?	Go to step 5.	Replace the fuser.
Step 5 Reseat the cables JLSU1 and J6 on the controller board. Does the problem remain?	Replace the LSU.	The problem is solved.

Toner rubs off

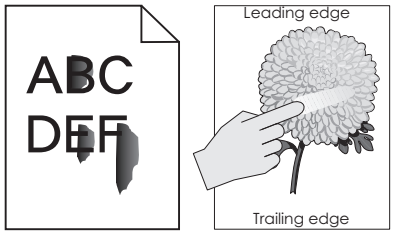

Actions	Yes	No
Step 1 Check if the fuser screws are tightly fastened. Are they tightly fastened?	Go to step 2.	Tighten the screws.
Step 2 **a** Turn off the printer. **b** Remove the rear door and cover. **c** Disconnect the fuser cable connected to PCN5 of the power supply. **d** Check for approximate correct resistance on the fuser cable: • 220V fuser—43 ohms • 110V fuser—10 ohms • 100V fuser—8 ohms Is the resistance equal to any of the above values?	Go to step 3.	Replace the fuser. See **"Fuser removal" on page 305**.
Step 3 Check the following fuser components for wear or damage: • Gears • Exit rollers • Belt fuser Are they free of damage?	Replace the power supply. See **"Power supply removal" on page 272**.	Replace the fuser. See **"Fuser removal" on page 305**.

Toner specks appear on prints

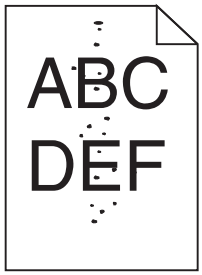

Actions	Yes	No
Step 1 Check the imaging unit for wear or damage. Is it free of wear or damage?	Go to step 2.	Replace the imaging unit.
Step 2 Make sure the paper path is free of debris or toner contamination. Does the problem remain?	Go to step 3.	The problem is solved.
Step 3 Check the transfer roll for contamination or excessive wear. Is it free of contamination or wear?	Go to step 4.	Replace the transfer roll.
Step 4 Remove the fuser and check for damage or debris on the rollers and belts. Is it free of damage and debris?	Go to step 5.	Replace the fuser.
Step 5 Reseat the cables JLSU1 and J6 on the controller board. Does the problem remain?	Replace the LSU.	The problem is solved.

Paper jams

Avoiding jams

Load paper properly

- Make sure paper lies flat in the tray.

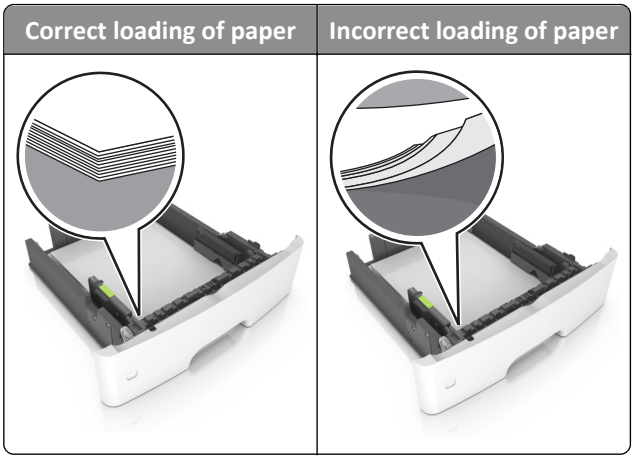

- Do not remove a tray while the printer is printing.
- Do not load a tray while the printer is printing. Load it before printing, or wait for a prompt to load it.
- Do not load too much paper. Make sure the stack height is below the maximum paper fill indicator.
- Do not slide the paper into the tray. Load paper as shown in the illustration.

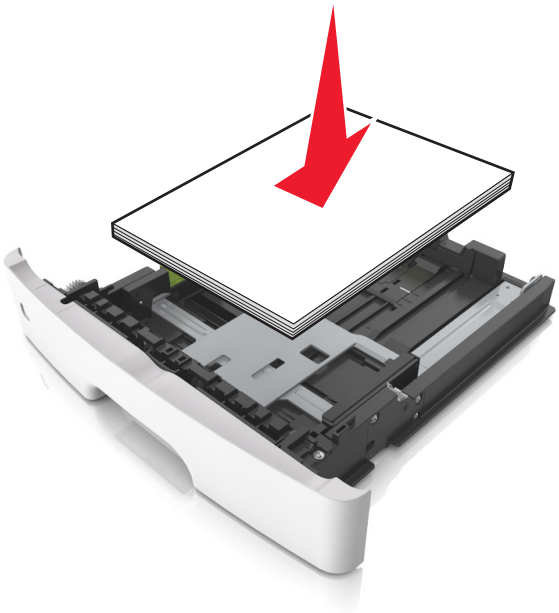

- Make sure the guides in the tray or the multipurpose feeder are properly positioned and are not pressing tightly against the paper or envelopes.
- Push the tray firmly into the printer after loading paper.

Use recommended paper

- Use only recommended paper or specialty media.
- Do not load wrinkled, creased, damp, bent, or curled paper.

- Flex, fan, and straighten paper before loading it.

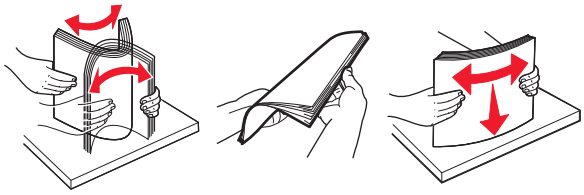

- Do not use paper that has been cut or trimmed by hand.
- Do not mix paper sizes, weights, or types in the same tray.
- Make sure the paper size and type are set correctly on the computer or printer control panel.
- Store paper according to manufacturer recommendations.

Understanding jam messages and locations

When a jam occurs, a message indicating the jam location and information to clear the jam appears on the printer display. Open the doors, covers, and trays indicated on the display to remove the jam.

Notes:

- When Jam Assist is set to On, the printer automatically flushes blank pages or pages with partial prints to the standard bin after a jammed page has been cleared. Check your printed output stack for discarded pages.
- When Jam Recovery is set to On or Auto, the printer reprints jammed pages. However, the Auto setting does not guarantee that the page will reprint.

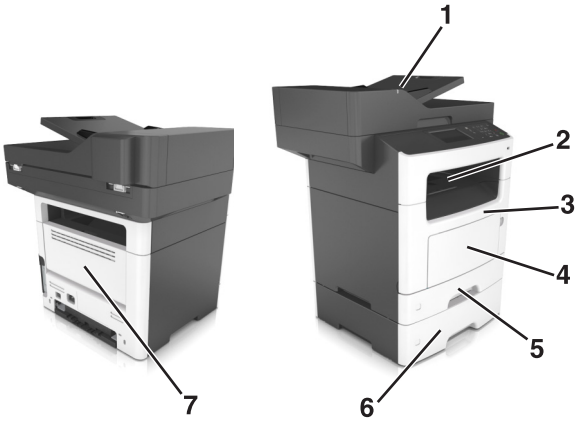

	Jam access area	Printer control panel message	What to do
1	Automatic document feeder (ADF)	[x]-page jam, open automatic feeder top cover. [28y.xx]	Remove all paper from the ADF tray, and then remove the jammed paper.
2	Standard bin	[x]-page jam, clear standard bin. [20y.xx]	Remove the jammed paper.
3	Front door	[x]-page jam, open front door. [20y.xx]	Open the front door, then remove the toner cartridge and imaging unit, and then the jammed paper.
4	Multipurpose feeder	[x]-page jam, clear manual feeder. [250.xx]	Remove all paper from the multipurpose feeder, and then remove the jammed paper.

	Jam access area	Printer control panel message	What to do
5	Tray 1	[x]-page jam, remove tray 1 to clear duplex. [23y.xx]	Pull out tray 1 completely, then push the front duplex flap down, and then remove the jammed paper. **Note:** You may need to open the rear door to clear some 23y.xx paper jams.
6	Tray [x]	[x]-page jam, remove tray [x]. [24y.xx]	Pull out the indicated tray, and then remove the jammed paper.
7	Rear door	[x]-page jam, open rear door. [20y.xx]	Open the rear door, and then remove the jammed paper.

200 paper jams

[x]-page jam, open front door. [20y.xx]

CAUTION—HOT SURFACE: The inside of the printer might be hot. To reduce the risk of injury from a hot component, allow the surface to cool before touching it.

1 Press the button on the right side of the printer, and then open the front door.

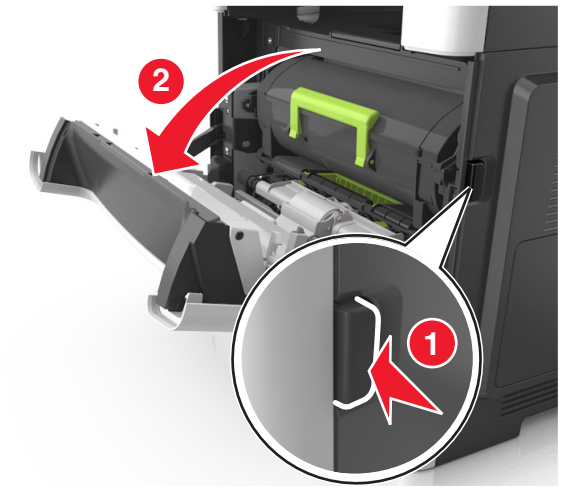

2 Pull the toner cartridge out using the handle.

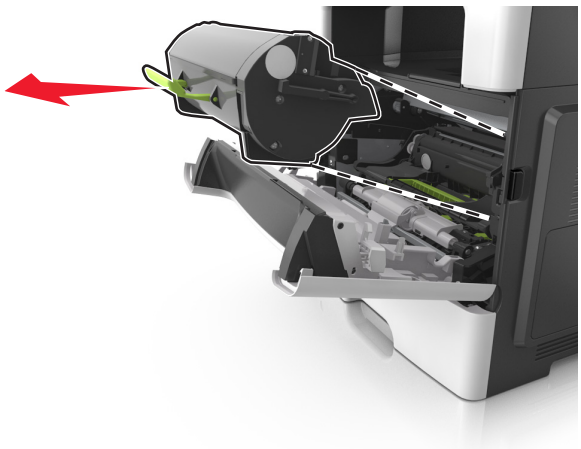

3 Lift the green handle, and then pull the imaging unit out of the printer.

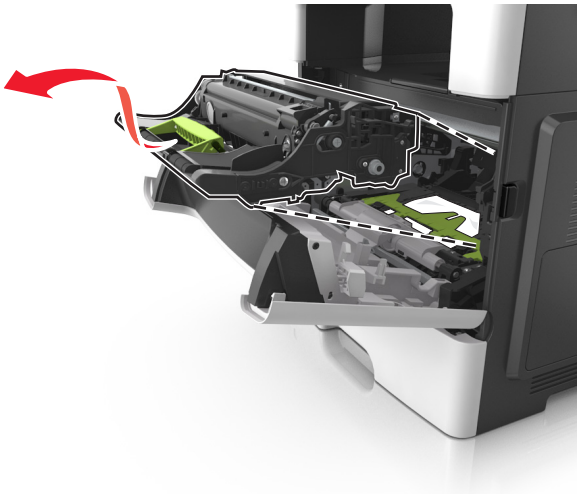

Warning—Potential Damage: Do not touch the shiny blue photoconductor drum under the imaging unit. Doing so may affect the quality of future print jobs.

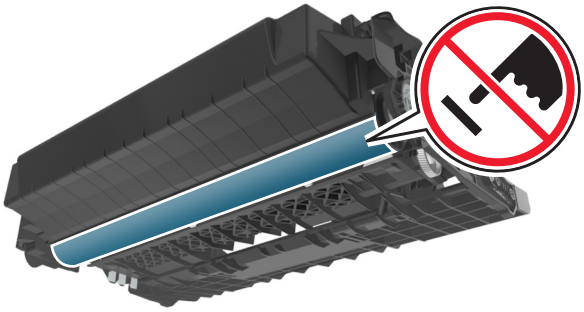

4 Place the imaging unit aside on a flat, smooth surface.

Warning—Potential Damage: Do not expose the imaging unit to direct light for more than 10 minutes. Extended exposure to light may cause print quality problems.

5 Lift the green flap in front of the printer.

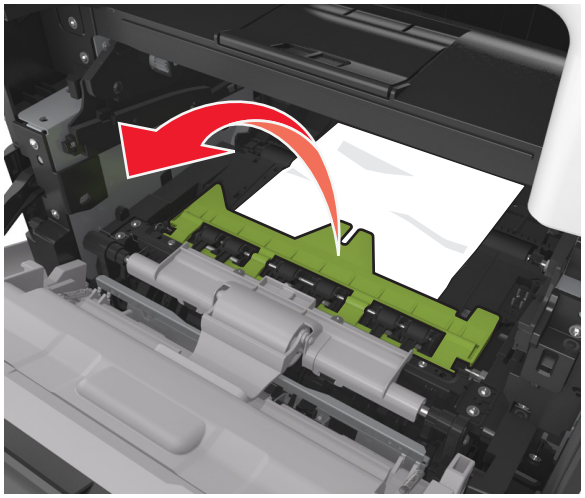

6 Firmly grasp the jammed paper on each side, and then gently pull it out.

Note: Make sure all paper fragments are removed.

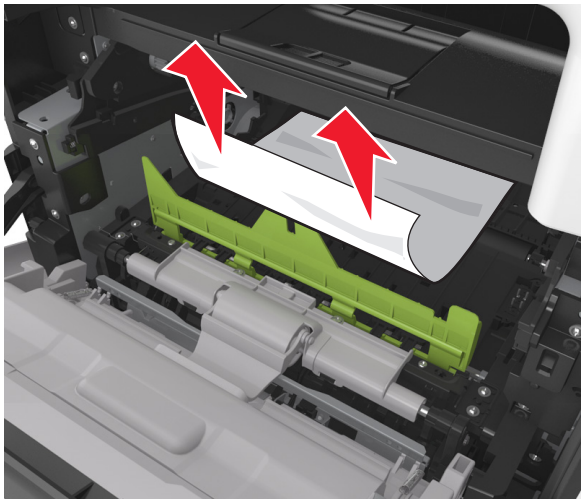

7 Insert the imaging unit by aligning the arrows on the side rails of the unit with the arrows on the side rails inside the printer, and then insert the imaging unit into the printer.

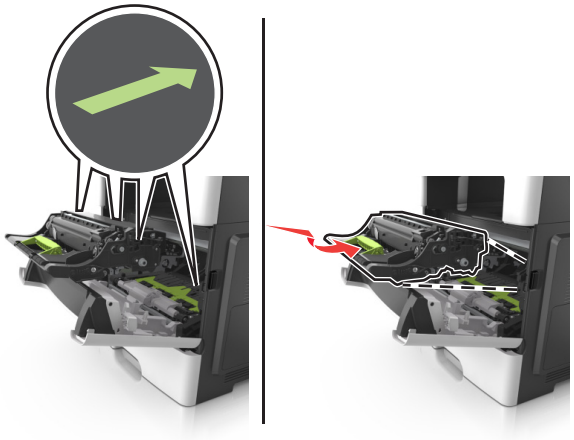

8 Insert the toner cartridge by aligning the side rails of the cartridge with the arrows on the side rails inside the printer, and then insert the cartridge into the printer.

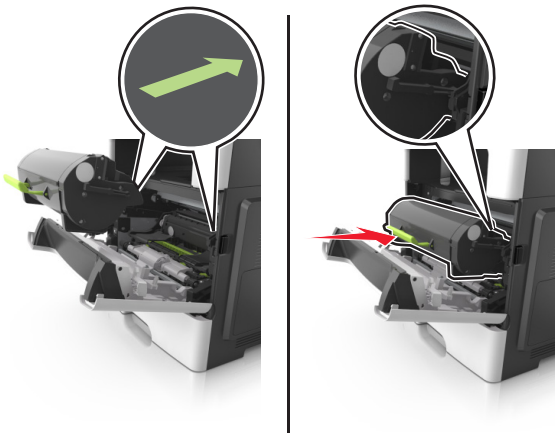

9 Close the front door.

10 From the printer control panel, touch to clear the message and continue printing. For non-touch-screen printer models, select **Next** > > **Clear the jam, press OK** > .

200 paper jam messages

Error code	Description	Action
200.01	Input sensor covered during warm-up sequence.	Go to **"Sensor (input) static jam service check" on page 52**.
200.02	Input sensor covered too quickly.	Go to **"Sensor (input) early/late arriving service check" on page 53**.
200.03	Media did not reach input sensor from MPF.	
200.05	Input sensor covered too long.	
200.07	Input sensor failed to become uncovered from sheet ahead.	
200.08	Page arrive at input senor at unexpected time.	
200.09	Printhead did not receive proper motor feedback to start laser servo.	Go to **"Sensor (input) image jam service check" on page 54**.
200.10	Printhead motor not locked when media reaches the input sensor.	
200.11	Printhead motor fell out of lock after page reaches the input sensor.	
200.12	Printhead was not ready for media.	
200.13	Media at input sensor is not the next media to be imaged.	
200.14	Media reached the input sensor before EP was ready.	
200.15	Image data did not start on time.	
200.16	Fuser motor stalled.	Go to **"Main drive motor control jam service check" on page 55**.
200.19	Page that was successfully picked from option tray never reached the input sensor.	Go to **"Sensor (input) early/late arriving service check" on page 53**.
200.21	No response from paper port driver while waiting for the source to deactivate the Input Source Ready flag to indicate it has initiated picking.	

Error code	Description	Action
200.23	Laser servo never started due to potential conflict with the transfer servo.	Go to **"Sensor (input) image jam service check" on page 54**.
200.24	Measured gap at input sensor too small to meet video delivery requirements. (Not enough time since prior image finished to start new image).	
200.29	Printhead drive control out of range due to an external event beyond what the control is designed to handle.	
200.30	Invalid printhead NVRAM.	
200.31	Paper, in the middle of a job, at input sensor before interrupt occurred.	Go to **"Sensor (input) early/late arriving service check" on page 53**.
200.32	Detected cover switch bounce.	
200.33	Input sensor covered too quickly.	
200.38	Interpage servo gap smaller than expected for galvo offset target evaluation.	Go to **"Sensor (input) early/late arriving service check" on page 53**.
200.42	Rogue sheet at ACM sensor while flushing the paper path prior to declaring tray 1 source empty.	
200.44	Page from tray 1 did not reach the input sensor (or the manual feed sensor, if present) after multiple pick attempts. Page did make it out of the tray at least as far as the ACM sensor.	
200.45	During warm up flush, sheet detected too long over input sensor.	

Sensor (input) static jam service check

Action	Yes	No
Step 1 Check the input sensor area for jammed media fragments. Is the paper path free of partially fed or jammed media?	Go to step 2.	Clear the paper path of any media fragments.
Step 2 Check the jam access cover if it is blocking the input sensor. Is it blocking the input sensor?	Replace the jam access cover. See **"Jam access cover removal" on page 264**.	Go to step 3.
Step 3 Check the input sensor cable for proper connection. Is it properly connected?	Go to step 4.	Reseat the cable.

Action	Yes	No
Step 4 POR into the Diagnostics menu and perform a sensor test: **Diagnostics Menu** > **Base Sensor Test** > **Input**. Does the sensor state on the control panel display change when it is toggled?	Go to step 5.	Replace the input sensor. See **"Duplex sensor and input sensor removal" on page 275**.
Step 5 Does the error remain?	Contact the next level of support.	The problem is solved.

Sensor (input) early/late arriving service check

Action	Yes	No
Step 1 Check the paper source. Is the paper from the MPF?	Go to step 2.	Go to step 5.
Step 2 Check the MPF pick roller and separator pad for damage and contamination. Are they free of damage and contamination?	Go to step 3.	Replace the MPF pick roller and separator pad. See **"MPF pick roller removal" on page 263** and **"Separator pad removal" on page 269**.
Step 3 Check the MPF solenoid for proper operation: **a** Remove the left cover. **b** POR into the Diagnostics menu and perform a feed test: **Diagnostics Menu** > **Input Tray Tests** > **Feed Test** > **Multipurpose feeder** **c** Check if the MPF solenoid moves when doing the feed test. Does it move when doing the feed test?	Go to step 4.	Replace the MPF solenoid. See **"MPF solenoid removal" on page 213**.
Step 4 Make sure the MPF gearbox spring is properly installed and free of damage. Check the MPF gearbox for wear or damage. Are they free of wear or damage?	Go to step 5.	Replace the MPF gearbox. See **"MPF gearbox removal" on page 215**.
Step 5 Check the input sensor area for jammed media fragments. Is the paper path free of partially fed or jammed media?	Go to step 6.	Clear the paper path of any media fragments.

Action	Yes	No
Step 6 Check the jam access cover if it is blocking the input sensor. Is it blocking the input sensor?	Replace the jam access cover. See **"Jam access cover removal" on page 264**	Go to step 7.
Step 7 Check the input sensor cable for proper connection. Is it properly connected?	Go to step 8.	Reseat the cable.
Step 8 POR into the Diagnostics menu and perform a sensor test: **Diagnostics Menu** > **Base Sensor Test** > **Input** Does the sensor state on the control panel display change when it is toggled?	Go to step 9.	Replace the input sensor. See **"Duplex sensor and input sensor removal" on page 275**.
Step 9 Does the error remain?	Contact the next level of support.	The problem is solved.

Sensor (input) image jam service check

Action	Yes	No
Step 1 Check the LSU cables for proper connection. Are they properly connected?	Go to step 2.	Reseat the cables.
Step 2 Inspect the LSU cables and connectors. Are they free of damage?	Go to step 3.	Replace the LSU. See **"Laser scanning unit (LSU) removal" on page 309**.
Step 3 Check the input sensor cable for proper connection. Is it properly connected?	Go to step 4.	Reseat the cable.
Step 4 POR into the Diagnostics menu and perform a feed test: **Diagnostics Menu** > **Input Tray Tests** > **Feed Tests** > **Tray 1** Does it pass the test?	Go to step 5.	Replace the LSU. See **"Laser scanning unit (LSU) removal" on page 309**.

Action	Yes	No
Step 5 POR into the Diagnostics menu and perform a sensor test: **Diagnostics Menu** > **Base Sensor Test** > **Input** Does the sensor state on the control panel display change when it is toggled?	Go to step 6.	Replace the input sensor. See **"Duplex sensor and input sensor removal" on page 275**.
Step 6 Check the controller board for any damage. Is it free of damage?	Go to step 7.	Replace the controller board. See **"Controller board removal" on page 231**.
Step 7 Does the error remain?	Contact the next level of support.	The problem is solved.

Main drive motor control jam service check

Action	Yes	No
Step 1 **a** Remove the main drive gearbox. **b** Check the main drive gearbox cable for proper connection. Is it properly connected?	Go to step 2.	Reseat the cable.
Step 2 **a** Remove the main drive gearbox. **b** Check the gears of main drive gearbox for wear or damage. Are they free of wear or damage?	Go to step 3.	Replace the main drive gearbox. See **"Main drive gearbox removal" on page 211**.
Step 3 Check the main drive motor for proper operation: **a** Remove the main drive gearbox. **Note:** Do not disconnect the main drive gearbox cable. **b** POR into the Diagnostics menu and perform a feed test: **Diagnostics menu** > **Input Tray Tests** > **Feed Test** > Select any input source **c** Check if the main drive motor rotates when doing the feed test. Does it rotate when doing the feed test?	Go to step 4.	Replace the main drive gearbox. See **"Main drive gearbox removal" on page 211**.
Step 4 Check the fuser gear for damage or toner contamination. Is it free of damage and contamination?	Replace the controller board. See **"Controller board removal" on page 231**.	Replace the fuser. See **"Fuser removal" on page 305**.

202 paper jams

[x]-page jam, open rear door. [20y.xx]

1 Open the front door to loosen the jammed paper in the rear door.

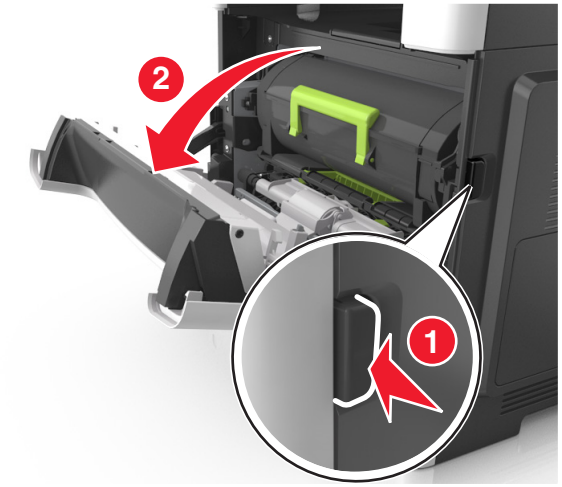

2 Gently pull down the rear door.

CAUTION—HOT SURFACE: The inside of the printer might be hot. To reduce the risk of injury from a hot component, allow the surface to cool before touching it.

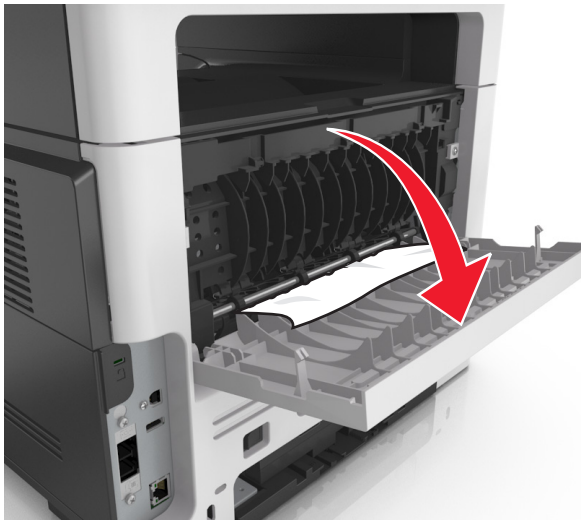

3 Firmly grasp the jammed paper on each side, and then gently pull it out.

Note: Make sure all paper fragments are removed.

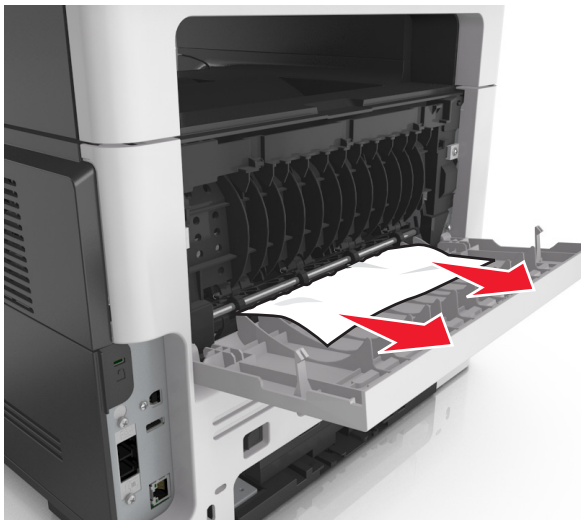

4 Close the rear door, and then the front door.

5 From the printer control panel, touch ✓ to clear the message and continue printing. For non-touch-screen printer models, select **Next** > ✓ > **Clear the jam, press OK** > ✓.

[x]-page jam, clear standard bin. [20y.xx]

1 Firmly grasp the jammed paper on each side, and then gently pull it out.

Note: Make sure all paper fragments are removed.

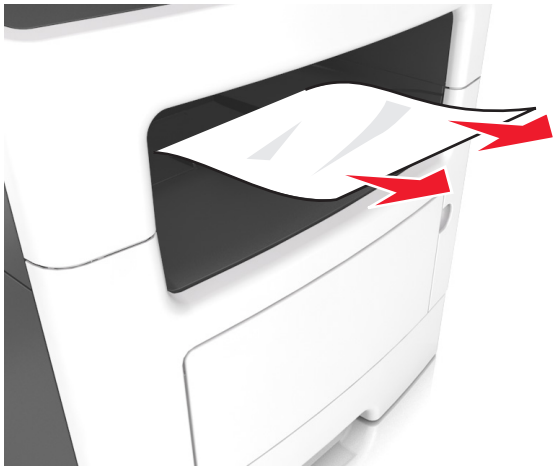

2 From the printer control panel, touch ✓ to clear the message and continue printing. For non-touch-screen printer models, select **Next** > ✓ > **Clear the jam, press OK** > ✓.

202 paper jam messages

Error code	Description	Action
202.01	Exit sensor is covered during warm up.	Go to **"Sensor (fuser exit) jam service check" on page 58**.
202.03	Media did not reach the fuser exit sensor.	
202.05	Fuser exit sensor covered too long by the current sheet.	
202.07	Fuser exit sensor covered too long by the previous sheet.	
202.13	Restart attempted after an internal jam without cover open. Close event. Likely that the jam was not actually cleared.	
202.16	Page at fuser nip before fuser started ramping toward desired. Indicates code may be receiving more hall interrupts than intended.	
202.17	Page at fuser nip before fuser reached acceptable operating temperature. Page arrived at fuser earlier than expected, so it was probably staged.	
202.22	Cartridge Motor - Motor Underspeed Error. Motor made it to closed loop steady state, but then detected speed was below threshold	
202.28	Exit sensor bounce issue.	
202.32	The sheet is too long to be duplexed. The blow through is enabled.	Go to **"Duplex service check" on page 62**.
202.36	Long paper or shingled multi feed stopped before sending to duplex.	
202.43	During warm up flush, media that passed the input sensor failed to reach the exit sensor.	Go to **"Sensor (fuser exit) jam service check" on page 58**.
202.45	During warm up flush, sheet detected too long over exit sensor.	

Sensor (fuser exit) jam service check

Action	Yes	No
Step 1 Check the input sensor area for jammed media fragments. Is the paper path free of partially fed or jammed media?	Go to step 2.	Clear the paper path of any media fragments.
Step 2 Check the fuser exit sensor cable JEXIT1 for proper connection to the controller board. Is it properly connected?	Go to step 3.	Reseat the cable.

Action	Yes	No
Step 3 Check the fuser exit sensor for damage. Is it free of damage?	Go to step 4.	Replace the fuser. See **"Fuser removal" on page 305**.
Step 4 Check the fuser gears and rollers for damage. Are they free of damage?	Go to step 5.	Replace the fuser. See **"Fuser removal" on page 305**.
Step 5 Does the error remain?	Contact the next level of support.	The problem is solved.

Sensor (narrow media) jam service check

Action	Yes	No
Step 1 Check the narrow media sensor cable JNRW1 for proper connection to the controller board. Is it properly connected?	Go to step 2.	Reseat the cable.
Step 2 Check the narrow media/bin full sensor for damage. Is it free of damage?	Go to step 3.	Replace the narrow media sensor. See **"Narrow media/bin full sensor removal" on page 302**.
Step 3 Check the redrive rollers for damage. Are they free of damage?	Go to step 4.	Replace the redrive assembly. See **"Redrive assembly removal" on page 304**.
Step 4 Does the error remain?	Contact the next level of support.	The problem is solved.

23y paper jams

[x]-page jam, remove tray 1 to clear duplex. [23y.xx]

CAUTION—HOT SURFACE: The inside of the printer might be hot. To reduce the risk of injury from a hot component, allow the surface to cool before touching it.

1 Pull the tray completely out of the printer.

2 Locate the blue lever, and then pull it down to release the jam.

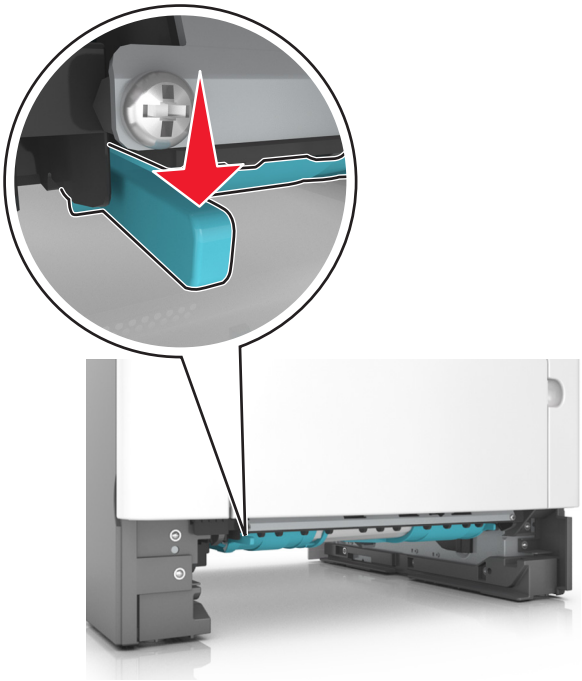

3 Firmly grasp the jammed paper on each side, and then gently pull it out.

Note: Make sure all paper fragments are removed.

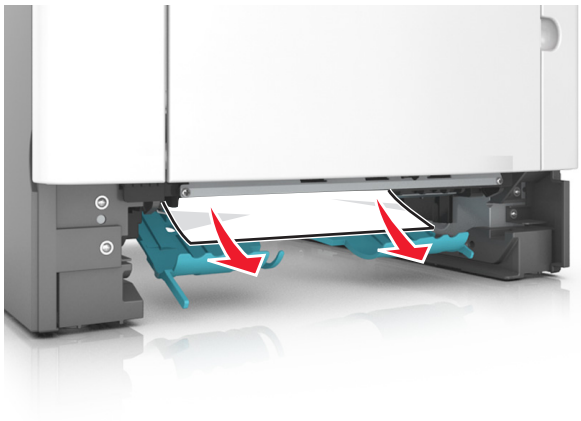

4 Insert the tray.

5 From the printer control panel, touch to clear the message and continue printing. For non-touch-screen printer models, select **Next** > > **Clear the jam, press OK** > .

23y.xx paper jam messages

Error code	Description	Action
230.01	Sheet covering internal duplex sensor during warm up.	Go to **“Duplex service check” on page 62**.
230.02	Paper jam around internal duplex.	
230.03	Internal duplex sensor never made by leading edge of page.	
230.04	Page in duplexer ahead of current reversing page never staged.	
230.05	Internal duplex sensor never broke on the trailing edge of the sheet.	
230.07	Internal duplex sensor never broke from sheet ahead of page.	
230.09	Page in duplexer never picked.	
230.10	Narrow page reversing into duplexer.	
230.28	Bouncy duplex sensor never made.	
232.03	Input sensor never detected sheet from internal duplex path.	
232.10	Feed error picking from the duplexer.	

Duplex service check

Action	Yes	No
Step 1 **a** Remove the rear cover. **b** Check the redrive rollers for wear or damage. Are they free of wear or damage?	Go to step 2.	Replace the redrive assembly. See **"Redrive assembly removal" on page 304**.
Step 2 **a** Remove the left cover. See **"Left cover removal" on page 209**. **b** POR into the Diagnostics menu and navigate to: **DUPLEX TESTS** >**Duplex Feed 1** **c** Check the reverse solenoid for proper operation. Does it function properly?	Go to step 3.	Replace the reverse solenoid. See **"Reverse solenoid removal" on page 218**.
Step 3 **a** Remove the input tray. **b** From under the printer, check the duplex gear assembly and duplex link for wear and damage. Are the they free of wear and damage?	Go to step 4.	Replace the duplex gear assembly. See **"Duplex gear assembly removal" on page 224**.
Step 4 From under the printer, check the duplex, belt, and roller for wear and damage. Are they free of wear and damage?	Go to step 5.	Replace the duplex. See **"Duplex removal" on page 274**.
Step 5 **a** POR into the Diagnostics menu and navigate to: **DUPLEX TESTS** >**Sensor Test** **b** Lower the jam access cover, and toggle the duplex sensor. Does the sensor state on the control panel change when it is toggled?	Go to step 6.	Replace the duplex sensor. See **"Duplex sensor and input sensor removal" on page 275**.
Step 6 Does the error remain?	Contact the next level of support.	The problem is solved.

24y paper jams

[x]-page jam, open tray [x]. [24y.xx]

1 Pull the tray completely out of the printer.

Note: The message on the printer display indicates the tray where the jammed paper is located.

2 Firmly grasp the jammed paper on each side, and then gently pull it out.

Note: Make sure all paper fragments are removed.

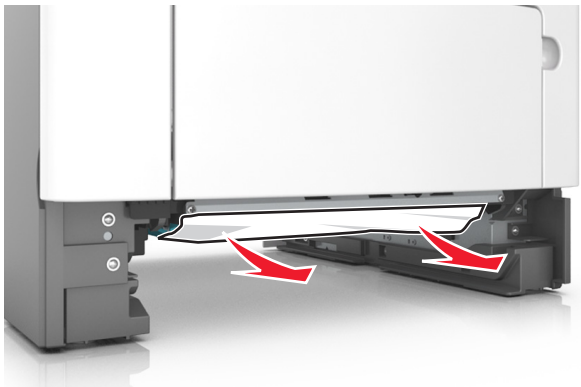

3 Insert the tray.

4 From the printer control panel, touch to clear the message and continue printing. For non-touch-screen printer models, select **Next** > > **Clear the jam, press OK** > .

24y.xx paper jam messages

Error code	Description	Action
241.01	Paper over tray 1 pass thru sensor on warmup.	Go to **“Tray 1 jam service check” on page 69**.
241.02	Sensor (input) early arriving jam.	
241.03	Tray 1 pass thru sensor never became covered when feeding a sheet from an option below.	
241.07	Option tray 1 pass thru sensor never became uncovered when feeding a sheet from an option below.	
241.13	The media is late reaching the sensor (input) within the specified time from tray 1.	

Error code	Description	Action
241.14	The media is late reaching the sensor (input) within the specified time from tray 1.	Go to **"Tray 1 jam service check" on page 69**.
241.15	Media tray 1, tray pulled jam.	
241.16	The engine timed out waiting for the tray 1 to report 'ready' before the 1st pick attempt.	
241.17	Page was not properly picked from tray 1. Have not exhausted all pick retry attempts as there are sheets committed to the paper path from below.	
241.18	Failed to feed from tray 1. Exhausted all pick retries. Paper present sensing indicates media is in the tray.	Go to **"Tray 1 jam service check" on page 69**.
241.20	Took too long to ramp up media feeder motor in tray 1.	
241.21	Media feeder motor stall in tray 1.	
241.22	Media feeder motor pick motor underspeed in tray 1.	
241.24	Media feeder motor stalled on the last pick attempt in tray 1.	Go to **"Tray 1 jam service check" on page 69**.
241.29	Tray 1 lift plate failed to make the index sensor while elevating.	
241.32	Media tray not ready.	
241.33	The media tray was pulled during the media pick process.	
241.41	Media feeder motor stall in tray 1.	Go to **"Tray 1 jam service check" on page 69**.
241.42	Media feeder motor pick motor under-speed in tray 1.	
241.43	Media feeder motor stalled on the last pick attempt in tray 1.	
241.44	Motor 2 (Separator/Passthru) motor stalled.	
241.45	Motor 2 (Separator/Passthru) motor PWM overflow error (underspeed). Motor underspeed (max PWM and motor underspeed, typical accordion jam).	Go to **"Tray 1 jam service check" on page 69**.
241.46	Motor 2 (Separator/Passthru) motor ramp (end ramp - did not reach speed, typical pack feed paper jam).	
241.47	Motor 3 motor stalled.	
241.48	Motor 3 motor PWM overflow error (underspeed). Motor underspeed (max PWM and motor underspeed, typical accordion jam).	
241.49	Motor 3 motor ramp (end ramp - did not reach speed, typical pack feed paper jam).	

Error code	Description	Action
242.01	Paper over tray 2 pass thru sensor on warmup.	Go to **“Option tray jam service check” on page 70**.
242.02	Input sensor detected late feed during a pick retry from tray 2.	
242.03	Tray 2 pass thru sensor never became covered when feeding a sheet from an option below.	
242.06	Failed to feed from tray. Paper present sensing supported and indicates media still in tray.	
242.07	Option tray 2 pass thru sensor never became uncovered when feeding a sheet from an option below.	
242.09	Tray 2 pick motor lost encoder.	Go to **“Option tray jam service check” on page 70**.
242.11	Autocomp Pick/Lift Motor—Encoder Never Detected in tray 2.	
242.12	Motor ramp up error in tray 2.	
242.13	Page to be stapled failed to feed from tray.	
242.14	Sheets flushed from paper path either due to feed error or cartridge error.	Go to **“Option tray jam service check” on page 70**.
242.15	One or more trays located above the source tray 2 has been pulled.	
242.16	The engine timed out waiting for the tray 2 to report ready before the 1st pick attempt.	
242.17	Page was not properly picked from tray 2. Have not exhausted all pick retry attempts as there are sheets committed to the paper path from below.	
242.19	Tray 2 fail to feed error. Detected while trying to pick a sheet, and that leading edge was not detected by tray sensor.	Go to **“Option tray jam service check” on page 70**.
242.20	Took too long to ramp up dc feed motor in tray 2.	
242.21	Pick motor stall in tray 2.	
242.22	Tray 2 pick motor underspeed.	
242.24	DC Feed autocompensator stalled on the last pick attempt in tray 2.	Go to **“Option tray jam service check” on page 70**.
242.32	Tray not ready.	
242.33	Pick received but detected a tray pulled.	
242.41	Motor 1 (Pick/Lift) Elevator motor stalled.	

Error code	Description	Action
242.42	Motor 1 (Pick/Lift) Elevator motor PWM overflow error (underspeed). Motor underspeed (max PWM and motor underspeed, typical accordion jam).	Go to **"Option tray jam service check" on page 70**.
242.43	Motor 1 (Pick/Lift) motor ramp (end ramp - did not reach speed, typical pack feed paper jam).	
242.44	Motor 2 (Separator/Passthru) motor stalled.	
242.45	Motor 2 (Separator/Passthru) motor PWM overflow error (underspeed). Motor underspeed (max PWM and motor underspeed, typical accordion jam).	
242.46	Motor 2 (Separator/Passthru) motor ramp (end ramp - did not reach speed, typical pack feed paper jam).	
242.47	Motor 3 motor stalled.	Go to **"Option tray jam service check" on page 70**.
242.48	Motor 3 motor PWM overflow error (underspeed). Motor underspeed (max PWM and motor underspeed, typical accordion jam).	
242.49	Motor 3 motor ramp (end ramp - did not reach speed, typical pack feed paper jam).	
243.01	Paper over tray 3 pass thru sensor on warmup.	
243.02	Input sensor detected late feed during a pick retry from tray 3.	Go to **"Option tray jam service check" on page 70**.
243.03	tray 3 pass thru sensor never became covered when feeding a sheet from an option below.	
243.06	Failed to feed from tray. Paper present sensing supported and indicates media still in tray.	
243.07	Option tray 3 pass thru sensor never became uncovered when feeding a sheet from an option below.	
243.09	Tray 3 pick motor lost encoder.	Go to **"Option tray jam service check" on page 70**.
243.10	Failed to feed from tray.	
243.11	Autocomp Pick / Lift Motor - Encoder never detected in tray 3.	
243.12	Motor ramp up error in tray 3.	
243.13	Page to be stapled failed to feed from tray.	Go to **"Option tray jam service check" on page 70**.
243.14	Sheets flushed from paper path either due to feed error or cartridge error.	
243.15	One or more trays located above the source tray 3 has been pulled.	
243.16	The engine timed out waiting for the tray 3 to report 'ready' before the 1st pick attempt.	

Error code	Description	Action
243.17	Page was not properly picked from tray 3. Have not exhausted all pick retry attempts as there are sheets committed to the paper path from below.	Go to **"Option tray jam service check" on page 70**.
243.19	Tray 3 fail to feed error. Detected while trying to pick a sheet, and that leading edge was not detected by tray sensor.	
243.20	Took too long to ramp up dc feed motor in tray 3.	
243.21	Pick motor stall in tray 3.	
243.22	Tray 3 pick motor underspeed.	Go to **"Option tray jam service check" on page 70**.
243.24	DC Feed autocompensator stalled on the last pick attempt in tray 3.	
243.32	Tray not ready.	
243.33	Pick received but detected a tray pulled.	
243.41	Motor 1 (Pick/Lift) Elevator motor stalled.	Go to **"Option tray jam service check" on page 70**.
243.42	Motor 1 (Pick/Lift) Elevator motor PWM overflow error (underspeed). Motor underspeed (max PWM and motor underspeed, typical accordion jam).	
243.43	Motor 1 (Pick/Lift) motor ramp (end ramp - did not reach speed, typical pack feed paper jam).	
243.44	Motor 2 (Separator/Passthru) motor stalled.	
243.45	Motor 2 (Separator/Passthru) motor PWM overflow error (underspeed). Motor underspeed (max PWM and motor underspeed, typical accordion jam).	Go to **"Option tray jam service check" on page 70**.
243.46	Motor 2 (Separator/Passthru) motor ramp (end ramp - did not reach speed, typical pack feed paper jam).	
243.47	Motor 3 motor stalled.	
243.48	Motor 3 motor PWM overflow error (underspeed). Motor underspeed (max PWM and motor underspeed, typical accordion jam).	
243.49	Motor 3 motor ramp (end ramp - did not reach speed, typical pack feed paper jam).	Go to **"Option tray jam service check" on page 70**.
244.01	Paper over tray 4 pass thru sensor on warmup.	
244.02	Input sensor detected late feed during a pick retry from tray 4.	
244.03	Tray 4 pass thru sensor never became covered when feeding a sheet from an option below.	

Error code	Description	Action
244.06	Failed to feed from tray. Paper present sensing supported and indicates media still in tray.	Go to **“Option tray jam service check” on page 70**.
244.07	Option tray 4 pass thru sensor never became uncovered when feeding a sheet from an option below.	
244.09	Tray 4 pick motor lost encoder.	
244.11	Autocomp Pick / Lift Motor - Encoder Never Detected in tray 4.	
244.12	Motor ramp up error in tray 4.	Go to **“Option tray jam service check” on page 70**.
244.13	Page to be stapled failed to feed from tray.	
244.14	Sheets flushed from paper path either due to feed error or cartridge error.	
244.15	One or more trays located above the source tray 4 has been pulled.	
244.16	The engine timed out waiting for the tray 4 to report 'ready' before the 1st pick attempt.	Go to **“Option tray jam service check” on page 70**.
244.17	Page was not properly picked from tray 4. Have not exhausted all pick retry attempts as there are sheets committed to the paper path from below.	
244.19	Tray 4 fail to feed error. Detected while trying to pick a sheet, and that leading edge was not detected by tray sensor.	
244.20	Took too long to ramp up dc feed motor in tray 4.	
244.21	Pick motor stall in tray 4.	Go to **“Option tray jam service check” on page 70**.
244.22	Tray 4 pick motor underspeed.	
244.24	DC Feed autocompensator stalled on the last pick attempt in tray 4.	
244.32	Tray not ready.	
244.33	Pick received but detected a tray pulled.	Go to **“Option tray jam service check” on page 70**.
244.41	Motor 1 (Pick/Lift) Elevator motor stalled.	
244.42	Motor 1 (Pick/Lift) Elevator motor PWM overflow error (underspeed). Motor underspeed (max PWM and motor underspeed, typical accordion jam).	
244.43	Motor 1 (Pick/Lift) motor ramp (end ramp - did not reach speed, typical pack feed paper jam).	

Error code	Description	Action
244.44	Motor 2 (Separator/Passthru) motor stalled.	Go to **"Option tray jam service check" on page 70**.
244.45	Motor 2 (Separator/Passthru) motor PWM overflow error (underspeed). Motor underspeed (max PWM and motor underspeed, typical accordion jam).	
244.46	Motor 2 (Separator/Passthru) motor ramp (end ramp - did not reach speed, typical pack feed paper jam).	
244.47	Motor 3 motor stalled.	
244.48	Motor 3 motor PWM overflow error (underspeed). Motor underspeed (max PWM and motor underspeed, typical accordion jam).	
244.49	Motor 3 motor ramp (end ramp - did not reach speed, typical pack feed paper jam).	

Tray 1 jam service check

Action	Yes	No
Step 1 Restart the printer. Does it fail to complete the POST sequence and display a 241.xx error?	Replace the index sensor.	Go to step 2.
Step 2 Check the pick tires. Are they free of wear or damage?	Go to step 3.	Replace the pick tires.
Step 3 Check the separator roll assembly. Is it free of wear or damage?	Go to step 4.	Replace the separator roll assembly. See **"Separator roll assembly removal" on page 332**.
Step 4 Check the tray guides. Are they free of wear or damage?	Go to step 5.	Replace the tray insert.
Step 5 **a** POR into the Diagnostics menu and perform a feed test: **Diagnostics Menu** > **Input Tray Tests** > **Feed Test** > **Tray 1** > **Continuous** **b** Cancel the test after five pages. Does the printer successfully feed the five pages into the output bin?	Go to step 7.	Go to step 6.

Action	Yes	No
Step 6 Observe the location of the jammed paper. Are the first page fed to the output bin, the second page jammed in the rear door, and the third page jammed in the input tray?	Go to step 7.	Replace the trailing edge sensor. See **"Trailing edge sensor removal" on page 282**.
Step 7 Perform a tray 1 pick/lift motor gearbox service check. See **"Tray 1 pick/lift motor gearbox service check" on page 104**. Does the error remain?	Go to step 8.	The problem is solved.
Step 8 Check the ACM assembly. Is it free of wear or damage?	Go to step 9.	Replace the ACM assembly. See **"ACM assembly removal" on page 288**.
Step 9 Check the MPF gearbox Is it free of wear or damage?	Go to step 10.	Replace the MPF gearbox. See **"MPF gearbox removal" on page 215**.
Step 10 Check the main drive gearbox Is it free of wear or damage?	Go to step 11.	Replace the main drive gearbox. See**"Main drive gearbox removal" on page 211**.
Step 11 Does the error remain?	Contact the next level of support.	The problem is solved.

Option tray jam service check

Action	Yes	No
Step 1 Restart the printer. Does it fail to complete the POST sequence and display a 242.01 error?	Replace the option tray.	Go to step 2.
Step 2 **a** POR into the Diagnostics menu and perform a feed test: **Diagnostics Menu** > **Input Tray Tests** > **Feed Test** > Select an option tray > **Continuous** **b** Cancel the test after five pages. Does the printer successfully feed the five pages into the output bin?	The problem is solved.	Go to step 3.
Step 3 Does the printer display a 242.06 error?	Replace the ACM assembly. See **"ACM assembly removal" on page 334**.	Go to step 4.

Action	Yes	No
Step 4 Check the pick roller assembly. Is it free of wear or damage?	Go to step 5.	Replace the pick roller assembly. See **"Pick roller removal" on page 332**.
Step 5 Check the separator roll assembly. Is it free of wear or damage?	Go to step 6.	Replace the separator roll assembly. See **"Separator roll assembly removal" on page 332**.
Step 6 Check the tray guides, lift plate, and lift plate gears. Are they free of wear or damage?	Go to step 7.	Replace the tray insert.
Step 7 Check the ACM assembly. Is it free of wear or damage?	Go to step 8.	Replace the ACM assembly. See **"ACM assembly removal" on page 334**.
Step 8 POR into the Diagnostics menu and perform a feed test: **Diagnostics Menu** > **Input Tray Tests** > **Feed Test** > Select an option tray Does the pick/lift motor gearbox pass the test?	Go to step 9.	Replace the option tray.
Step 9 Does the error remain?	Contact the next level of support.	The problem is solved.

25y paper jams

[x]-page jam, clear manual feeder. [25y.xx]

1 From the multipurpose feeder, firmly grasp the jammed paper on each side, and then gently pull it out.

Note: Make sure all paper fragments are removed.

2 Flex the sheets of paper back and forth to loosen them, and then fan them. Do not fold or crease the paper. Straighten the edges on a level surface.

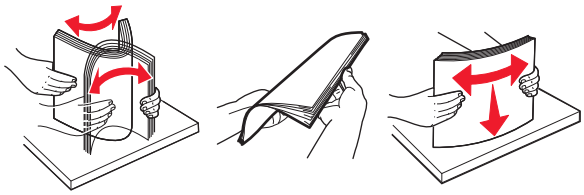

3 Reload paper into the multipurpose feeder.

Note: Make sure the paper guide lightly rests against the edge of the paper.

4 From the printer control panel, touch ✓ to clear the message and continue printing. For non-touch-screen printer models, select **Next** > ✓ > **Clear the jam, press OK** > ✓.

25y.xx paper jam messages

Error code	Description	Action
250.06	Input sensor did not detect sheet picked from MPF. No other sheets should be in the path.	Go to **"MPF service check" on page 73**.
250.10	Input sensor did not detect sheet picked from MPF. No other sheets should be in the path.	
250.13	Input sensor did not detect sheet picked from MPF. Sheet also last page of stapled job.	
250.14	Input sensor did not detect sheet picked from MPF. Other sheets should have been flushed.	
250.17	Input sensor did not detect sheet picked from MPF. No other sheets should be in the path.	
250.18	Input sensor did not detect sheet picked from MPF. Other sheets could be in the path.	

MPF service check

Action	Yes	No
Step 1 Check the springs, links, and tray guides on the MPF assembly for damage. Are they free of damage?	Go to step 2.	Replace the MPF assembly. See **"MPF tray removal" on page 260**.
Step 2 **a** Make sure the MPF sensor cable is properly connected to the controller board. **b** POR into the Diagnostics menu and perform a sensor test: **Diagnostics Menu** > **Input Tray Tests** > **Sensor Tests** > **Multi-Purpose Feeder** Does the sensor state on the control panel display change when it is toggled?	Go to step 3.	Replace the front input guide. See **"Front input guide removal" on page 267**.
Step 3 Make sure the MPF pick roller and separator pad are free of debris. Check both for wear or damage. Are they free of damage?	Go to step 4.	Replace the MPF pick roller and separator pad. See **"MPF pick roller removal" on page 263** and **"Separator pad removal" on page 269**.

Action	Yes	No
Step 4 **a** Remove the left cover. **b** POR into the Diagnostics menu and perform a feed test: **Diagnostics Menu** > **Input Tray Tests** > **Feed Tests** > **Multi-Purpose Feeder** **c** Check the MPF solenoid for proper operation. Does it function properly?	Go to step 5.	Replace the MPF solenoid. See **"MPF solenoid removal" on page 213**.
Step 5 **a** Make sure the MPF gearbox is free of debris. **b** Check the gears and spring of the MPF gearbox for wear or damage. Are they free of damage?	Go to step 6.	Replace the MPF gearbox. See **"MPF gearbox removal" on page 215**.
Step 6 Does the error remain?	Contact the next level of support.	The problem is solved.

28y paper jams

[x]-page jam, open automatic feeder top cover. [28y.xx]

1 Remove all original documents from the ADF tray.

Note: The message is cleared when the pages are removed from the ADF tray.

2 Open the ADF cover.

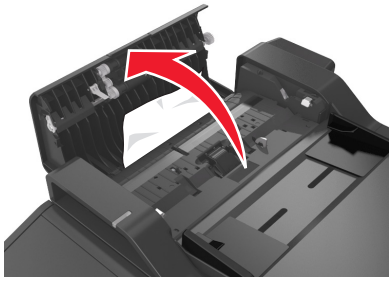

3 Firmly grasp the jammed paper on each side, and then gently pull it out.

Note: Make sure all paper fragments are removed.

4 Close the ADF cover.

5 Straighten the edges of the original documents, then load the original documents into the ADF, and then adjust the paper guide.

6 From the printer control panel, touch ✓ to clear the message and continue printing. For non-touch-screen printer models, select **Next** > ✓ > **Clear the jam, press OK** > ✓.

28y.xx paper jams

28x.xx paper jams

Error code	Description	Action
280.06	Paper Missing—Posted when paper is removed from input tray after job is initiated.	Ensure that the ADF document sensor is in the proper position and clear of dust and deris. Retry the job. If the error recurs, then see **"ADF paper jam service check" on page 134**.
282.01	ADF Static Jam—Interval Sensor active at POR time.	Remove the sheet of paper rom the ADF. Retry the job. If the error recurs, then see **"ADF paper jam service check" on page 134**.
282.03	ADF Pickup Jam—LE of paper does not reach Interval Sensor in time.	Remove the sheet of paper rom the ADF. Check the media weight, Heavier paper should not be used. Make the stack of documents in the tray smaller. Ensure that the media is not being shoved into the tray. Retry the job. If the error recurs, then see **"ADF paper jam service check" on page 134**.
282.05	ADF Long Page—TE never clears interval sensor (but 1st Scan Sensor and Exit Sensor are both active).	
283.01	ADF Static Jam—1st Scan Sensor active at POR time.	Inspect the ADF paper path for paper fragments. Restart the MFP. If the error recurs, then see **"ADF paper jam service check" on page 134**.
283.03	ADF Feed Jam—LE of paper does not reach 1st Scan Sensor in time.	Remove the sheet of paper rom the ADF. Retry the job. If the error recurs, then see **"ADF paper jam service check" on page 134**.
283.05	1st Scan Sensor Jam—TE never clears 1st Scan Sensor.	Remove the sheet of paper rom the ADF. Retry the job. If the error recurs, then see **"ADF paper jam service check" on page 134**.
286.02	ADF Backfeed—Page(s) in the exit area accidentally gets pulled into the reverse path.	Too many sheets of paper in the ADF exit bin. Remove the sheets from the ADF exit bin.
286.03	ADF Backside Feed Jam—LE does not reach the multi-purpose Interval Sensor in time when page routed through reverse area.	Remove the sheet of paper from the ADF. Retry the job. If the error recurs, then see **"ADF paper jam service check" on page 134**.
286.05	ADF Backside Jam—TE does not reach the multi-purpose Interval Sensor in time when page routed through reverse area.	

29y.xx paper jams

29x.xx paper jams

Error code	Description	Action
290.11	ADF Cover Open Jam—Posted when ADF top cover is opened during ADF job.	Close the cover. If the error recurs, then perform the ADF cover open service check

Understanding printer messages

Cartridge low [88.xy]

You may need to order a toner cartridge. If necessary, select **Continue** on the printer control panel to clear the message and continue printing. For non-touch-screen printer models, press ✓ to confirm.

Cartridge nearly low [88.xy]

If necessary, select **Continue** on the printer control panel to clear the message and continue printing. For non-touch-screen printer models, press ✓ to confirm.

Cartridge very low, [x] estimated pages remain [88.xy]

You may need to replace the toner cartridge very soon. For more information, see the "Replacing supplies" section of the *User's Guide*.

If necessary, select **Continue** on the printer control panel to clear the message and continue printing. For non-touch-screen printer models, press ✓ to confirm.

Change [paper source] to [custom string] load [paper orientation]

Try one or more of the following:

- Load the correct size and type of paper in the tray, then verify that the paper size and type settings are specified in the Paper menu on the printer control panel, and then select **Finished changing paper**. For non-touch-screen printer models, press ✓ to confirm.
- Cancel the print job.

Change [paper source] to [custom type name] load [orientation]

Try one or more of the following:

- Load the correct paper size and type in the tray, verify the paper size and type settings are specified in the Paper menu on the printer control panel, and then select **Finished changing paper**. For non-touch-screen printer models, press ✓ to confirm.
- Cancel the print job.

Change [paper source] to [paper size] load [orientation]

Try one or more of the following:

- Load the correct paper size and type in the tray, verify the paper size and type settings are specified in the Paper menu on the printer control panel, and then select **Finished changing paper**. For non-touch-screen printer models, press ✓ to confirm.
- Cancel the print job.

Change [paper source] to [paper type] [paper size] load [orientation]

Try one or more of the following:

- Load the correct paper size and type in the tray, verify the paper size and type settings are specified in the Paper menu on the printer control panel, and then select **Finished changing paper**. For non-touch-screen printer models, press ✓ to confirm.
- Cancel the print job.

Close flatbed cover and load originals if restarting job [2yy.xx]

From the printer control panel, try one or more of the following:

- Select **Scan from automatic feeder** to continue scanning from the ADF immediately after the last successful scan job.
- Select **Scan from flatbed** to continue scanning from the scanner glass immediately after the last successful scan job.
- Select **Finish job without further scanning** to end the last successful scan job.

  Note: This does not cancel the scan job. All successfully scanned pages will be processed further for copying, faxing, or e-mailing.
- Select **Cancel job** to clear the message and cancel the scan job.
- For non-touch-screen printer models, press ✓ to confirm.

Close door

Make sure the right side cover is installed, and then close the front and top doors to clear the message.

Configuration change, some held jobs were not restored [57]

Held jobs are invalidated because of any of the following possible changes in the printer:

- The printer firmware has been updated.
- The tray for the print job is removed.
- The print job is sent from a flash drive that is no longer attached to the USB port.
- The printer hard disk contains print jobs that were stored when the hard disk was installed in a different printer model.

From the printer control panel, select **Continue** to clear the message. For non-touch-screen printer models, press ✓ to confirm.

Complex page, some data may not have printed [39]

Try one or more of the following:

- From the printer control panel, select **Continue** to ignore the message and continue printing. For non-touch-screen printer models, press ✓ to confirm.
- Cancel the current print job. For non-touch-screen printer models, press ✓ to confirm.
- Install additional printer memory.

Defective flash detected [51]

Try one or more of the following:

- Replace the defective flash memory card.
- From the printer control panel, select **Continue** to ignore the message and continue printing. For non-touch-screen printer models, press ✓ to confirm.
- Cancel the current print job.

Disk must be formatted for use in this device

From the printer control panel, select **Format disk** to format the printer hard disk and clear the message. For non-touch-screen printer models, press ✓ to confirm.

Note: Formatting deletes all the files stored in the printer hard disk.

Error reading USB drive. Remove USB.

An unsupported USB device is inserted. Remove the USB device, and then insert a supported one.

Error reading USB hub. Remove hub.

An unsupported USB hub has been inserted. Remove the USB hub, and then install a supported one.

Fax partition inoperative. Contact system administrator.

Try either of the following:

- From the printer control panel, select **Continue** to clear the message. For non-touch-screen printer models, press ✓ to confirm.
- Turn the printer off, and then turn it back on. If the message appears again, then contact your system support person or see the “Setting up the printer to fax” section of the *User’s Guide*.

Fax server 'To Format' not set up. Contact system administrator.

Try either of the following:

- From the printer control panel, select **Continue** to clear the message. For non-touch-screen printer models, press ✓ to confirm.
- Complete the Fax Server setup. If the message appears again, then contact your system support person.

Fax Station Name not set up. Contact system administrator.

Try either of the following:

- From the printer control panel, select **Continue** to clear the message. For non-touch-screen printer models, press ✓ to confirm.
- Complete the Analog Fax Setup. If the message appears again after completing the setup, then contact your system support person.

Fax Station Number not set up. Contact system administrator.

Try either of the following:

- From the printer control panel, select **Continue** to clear the message. For non-touch-screen printer models, press ✓ to confirm.
- Complete the Analog Fax Setup. If the message appears again after completing the setup, then contact your system support person.

Imaging unit low [84.xy]

You may need to order an imaging unit. If necessary, select **Continue** on the printer control panel to clear the message and continue printing. For non-touch-screen printer models, press ✓ to confirm.

Imaging unit nearly low [84.xy]

If necessary, select **Continue** on the printer control panel to clear the message and continue printing. For non-touch-screen printer models, press ✓ to confirm.

Imaging unit very low, [x] estimated pages remain [84.xy]

You may need to replace the imaging unit very soon. For more information, see the "Replacing supplies" section of the *User's Guide*.

If necessary, select **Continue** on the printer control panel to clear the message and continue printing. For non-touch-screen printer models, press ✓ to confirm.

Incorrect paper size, open [paper source] [34]

Try one or more of the following:

- Load the correct size of paper in the tray.
- From the printer control panel, select **Continue** to clear the message and print using a different tray. For non-touch-screen printer models, press ✓ to confirm.
- Check the tray length and width guides and make sure the paper is loaded properly in the tray.
- Make sure the correct paper size and type are specified in the Printing Preferences or in the Print dialog.
- Make sure the paper size and type are specified in the Paper menu on the printer control panel.
- Make sure that the paper size is correctly set. For example, if MP Feeder Size is set to Universal, then make sure the paper is large enough for the data being printed.
- Cancel the print job.

Insufficient memory, some Held Jobs were deleted [37]

The printer deleted some held jobs in order to process current jobs.

Select **Continue** to clear the message. For non-touch-screen printer models, press ✓ to confirm.

Insufficient memory, some held jobs will not be restored [37]

Try one or more of the following:

- From the printer control panel, select **Continue** to clear the message. For non-touch-screen printer models, press ✓ to confirm.
- Delete other held jobs to free up additional printer memory.

Insufficient memory for Flash Memory Defragment operation [37]

Try one or more of the following:

- From the printer control panel, select **Continue** to stop the defragmentation and continue printing. For non-touch-screen printer models, press ✓ to confirm.
- Delete fonts, macros, and other data from the printer memory.
- Install additional printer memory.

Insufficient memory to collate job [37]

Try one or more of the following:

- From the printer control panel, select **Continue** to print the part of the job already stored and begin collating the rest of the print job. For non-touch-screen printer models, press ✓ to confirm.
- Cancel the current print job.

Insufficient memory to support Resource Save feature [35]

Install additional printer memory or select **Continue** on the printer control panel to disable Resource Save, clear the message, and continue printing. For non-touch-screen printer models, press ✓ to confirm.

Load manual feeder with [custom string] [paper orientation]

Try one or more of the following:

- Load the feeder with the correct size and type of paper.
- Depending on your printer model, touch **Continue** or press ✓ to clear the message and continue printing.

  Note: If no paper is loaded in the feeder when **Continue** or ✓ is selected, then the printer automatically overrides the request, and then prints from an automatically selected tray.
- Cancel the current job.

Load manual feeder with [custom type name] [paper orientation]

Try one or more of the following:

- Load the multipurpose feeder with the correct size and type of paper.
- Depending on your printer model, touch **Continue** or press ✓ to clear the message and continue printing.

  Note: If no paper is loaded in the feeder when **Continue** or ✓ is selected, then the printer manually overrides the request, and then prints from an automatically selected tray.
- Cancel the current job.

Load manual feeder with [paper size] [paper orientation]

Try one or more of the following:

- Load the multipurpose feeder with the correct size of paper.
- Depending on your printer model, touch **Continue** or press ✓ to clear the message and continue printing.

  Note: If no paper is loaded in the feeder when **Continue** or ✓ is selected, then the printer manually overrides the request, and then prints from an automatically selected tray.
- Cancel the current job.

Load manual feeder with [paper type] [paper size] [paper orientation]

Try one or more of the following:

- Load the multipurpose feeder with the correct size and type of paper.
- Depending on your printer model, touch **Continue** or press ✓ to clear the message and continue printing.

  Note: If no paper is loaded in the feeder when **Continue** or ✓ is selected, then the printer manually overrides the request, and then prints from an automatically selected tray.
- Cancel the current job.

Load [paper source] with [custom string] [paper orientation]

Try one or more of the following:

- Load the tray or feeder with the correct size and type of paper.
- To use the tray that has the correct size or type of paper, select **Finished loading paper** on the printer control panel.

  For non-touch-screen printer models, press ✓ to confirm.

  Note: If the printer finds a tray that has the correct size and type of paper, then it feeds from that tray. If the printer cannot find a tray that has the correct size and type of paper, then it prints from the default paper source.
- Cancel the current job.

Load [paper source] with [custom type name] [paper orientation]

Try one or more of the following:

- Load the tray or feeder with the correct size and type of paper.
- To use the tray that has the correct size or type of paper, select **Finished loading paper** on the printer control panel.

  For non-touch-screen printer models, press ✓ to confirm.

  Note: If the printer finds a tray that has the correct size and type of paper, then it feeds from that tray. If the printer cannot find a tray that has the correct size and type of paper, then it prints from the default paper source.
- Cancel the current job.

Load [paper source] with [paper size] [paper orientation]

Try one or more of the following:

- Load the tray or feeder with the correct size of paper.
- To use the tray or feeder that has the correct size of paper, select **Finished loading paper** on the printer control panel. For non-touch-screen printer models, press ✓ to confirm.

  Note: If the printer finds a tray that has the correct size and type of paper, then it feeds from that tray. If the printer cannot find a tray that has the correct size and type of paper, then it prints from the default paper source.
- Cancel the current job.

Load [paper source] with [paper type] [paper size] [paper orientation]

Try one or more of the following:

- Load the tray or feeder with the correct size and type of paper.
- To use the tray or feeder that has the correct size and type of paper, select **Finished loading paper** on the printer control panel. For non-touch-screen printer models, press ✓ to confirm.

  Note: If the printer finds a tray that has the correct size and type of paper, then it feeds from that tray. If the printer cannot find a tray that has the correct size and type of paper, then it prints from the default paper source.
- Cancel the current job.

Maintenance kit low [80.xy]

You may need to order a maintenance kit. For more information, contact customer support at **http://support.lexmark.com** or your service representative. If necessary, select **Continue** to clear the message and continue printing. For non-touch-screen printer models, press ✓ to confirm.

Maintenance kit nearly low [80.xy]

For more information, contact customer support at **http://support.lexmark.com** or your service representative. If necessary, select **Continue** to clear the message and continue printing. For non-touch-screen printer models, press ✓ to confirm.

Maintenance kit very low, [x] estimated pages remain [80.xy]

You may need to replace the maintenance kit very soon. For more information, contact customer support at **http://support.lexmark.com** or your service representative.

If necessary, select **Continue** on the printer control panel to clear the message and continue printing. For non-touch-screen printer models, press ✓ to confirm.

Memory full [38]

Try one or more of the following:

- From the printer control panel, select **Cancel job** to clear the message. For non-touch-screen printer models, press ✓ to confirm.
- Install additional printer memory.

Memory full, cannot print faxes

From the printer control panel, select **Continue** to clear the message without printing. For non-touch-screen printer models, press ✓ to confirm.

Note: Held faxes will attempt to print after the printer restarts.

Memory full, cannot send faxes

1 From the printer control panel, select **Continue** to clear the message and cancel the fax job. For non-touch-screen printer models, press ✓ to confirm.

2 Do either of the following:
   - Reduce the fax resolution, and then resend the fax job.
   - Reduce the number of pages in the fax, and then resend fax job.

Network [x] software error [54]

Try one or more of the following:

- From the printer control panel, select **Continue** to continue printing. For non-touch-screen printer models, press ✓ to confirm.
- Turn off the printer, wait for about 10 seconds, and then turn the printer back on.
- Update the network firmware in the printer or print server. For more information, contact customer support.

No analog phone line connected to modem, fax is disabled.

Connect the printer to an analog phone line.

Non-Lexmark [supply type], see User's Guide [33.xy]

Note: The supply type can be toner cartridge or imaging unit.

The printer has detected a non-Lexmark supply or part installed in the printer.

Your Lexmark printer is designed to function best with genuine Lexmark supplies and parts. Use of third-party supplies or parts may affect the performance, reliability, or life of the printer and its imaging components.

All life indicators are designed to function with Lexmark supplies and parts and may deliver unpredictable results if third-party supplies or parts are used. Imaging component usage beyond the intended life may damage your Lexmark printer or associated components.

Warning—Potential Damage: Use of third-party supplies or parts can affect warranty coverage. Damage caused by the use of third-party supplies or parts may not be covered by the warranty.

To accept any and all of these risks and to proceed with the use of non-genuine supplies or parts in your printer, press and hold ✕ and the **#** button on the printer control panel simultaneously for 15 seconds.

For non-touch-screen printer models, press ✓ and ✕ on the printer control panel simultaneously for 15 seconds to clear the message and continue printing.

If you do not wish to accept these risks, then remove the third-party supply or part from your printer, and then install a genuine Lexmark supply or part.

Note: For a list of supported supplies, see the "Ordering supplies" section of the *User's Guide* or visit **www.lexmark.com**.

Not enough free space in flash memory for resources [52]

Try one or more of the following:

- From the printer control panel, select **Continue** to clear the message and continue printing. For non-touch-screen printer models, press to confirm.
- Delete fonts, macros, and other data stored in the flash memory.
- Upgrade to a larger capacity flash memory card.

Note: Downloaded fonts and macros that are not previously stored in the flash memory are deleted.

Printer had to restart. Last job may be incomplete.

From the printer control panel, touch to clear the message and continue printing. For non-touch-screen printer models, press to confirm.

For more information, visit **http://support.lexmark.com** or contact customer support.

Reinstall defective or unresponsive cartridge [31.xy]

Remove and reinstall the toner cartridge. For more information, see the instruction sheet that came with the supply.

Reinstall missing or unresponsive cartridge [31.xy]

Try one or more of the following:

- Check if the toner cartridge is missing. If missing, install the toner cartridge.

  For information on installing the cartridge, see the “Replacing supplies” section of the *User’s Guide*.
- If the toner cartridge is installed, then remove the unresponsive toner cartridge, and then reinstall it.

  Note: If the message appears after reinstalling the supply, then the cartridge is defective. Replace the toner cartridge.

Remove paper from standard output bin

Remove the paper stack from the standard bin. The printer automatically detects paper removal and resumes printing.

If removing the paper does not clear the message, then select **Continue** on the printer control panel. For non-touch-screen printer models, press to confirm.

Replace all originals if restarting job.

From the printer control panel, try one or more of the following:

- Select **Cancel job** to clear the message and cancel the scan job.
- Select **Scan from automatic feeder** to continue scanning from the ADF immediately after the last successful scan job.
- Select **Scan from flatbed** to continue scanning from the scanner immediately after the last successful scan job.

- Select **Finish job without further scanning** to end the last successful scan job.
- Select **Restart job** to restart the scan job with the same settings from the previous scan job.
- For non-touch-screen printer models, press ✓ to confirm.

Replace cartridge, 0 estimated pages remain [88.xy]

Replace the toner cartridge to clear the message and continue printing. For more information, see the instruction sheet that came with the supply or see the "Replacing supplies" section of the *User's Guide*.

Note: If you do not have a replacement cartridge, then see the "Ordering supplies" section of the *User's Guide* or visit **www.lexmark.com**.

Replace cartridge, printer region mismatch [42.xy]

Install a toner cartridge that matches the region number of the printer. *x* indicates the value of the printer region. *y* indicates the value of the cartridge region. x and y can have the following values:

List of printer and toner cartridge regions

Region number	Region
0	Global
1	United States, Canada
2	European Economic Area (EEA), Switzerland
3	Asia Pacific, Australia, New Zealand
4	Latin America
5	Africa, Middle East, rest of Europe
9	Invalid

Notes:

- The x and y values are the .xy of the error code shown on the printer control panel.
- The x and y values must match for printing to continue.

Replace defective imaging unit [31.xy]

Replace the defective imaging unit to clear the message. For more information, see the instruction sheet that came with the supply.

Note: If you do not have a replacement imaging unit, then see the "Ordering supplies" section of the *User's Guide* or visit **www.lexmark.com**.

Replace jammed originals if restarting job.

From the printer control panel, try one or more of the following:

- Select **Cancel job** to clear the message and cancel the scan job. For non-touch-screen printer models, press ✓ to confirm.
- Select **Scan from automatic feeder** to continue scanning from the ADF immediately after the last successful scan job. For non-touch-screen printer models, press ✓ to confirm.
- Select **Scan from flatbed** to continue scanning from the scanner immediately after the last successful scan job. For non-touch-screen printer models, press ✓ to confirm.
- Select **Finish job without further scanning** to end the last successful scan job. For non-touch-screen printer models, press ✓ to confirm.
- Select **Restart job** to restart the scan job with the same settings from the previous scan job. For non-touch-screen printer models, press ✓ to confirm.

Replace imaging unit, 0 estimated pages remain [84.xy]

Replace the imaging unit to clear the message and continue printing. For more information, see the instruction sheet that came with the supply or see the "Replacing supplies" section of the *User's Guide*.

Note: If you do not have a replacement imaging unit, then see the "Ordering supplies" section of the *User's Guide* or visit **www.lexmark.com**.

Replace maintenance kit, 0 estimated pages remain [80.xy]

Contact customer support at **http://support.lexmark.com** or your service representative, and then report the message. The printer is scheduled for maintenance.

Reinstall missing or unresponsive imaging unit [31.xy]

Try one or more of the following:

- Check if the imaging unit is missing. If missing, install the imaging unit.

  For information on installing the imaging unit, see the "Replacing supplies" section of the *User's Guide*.
- If the imaging unit is installed, then remove the unresponsive imaging unit, and then reinstall it.

  Note: If the message appears after reinstalling the supply, then the imaging unit is defective. Replace the imaging unit.

Replace unsupported cartridge [32.xy]

Remove the toner cartridge, and then install a supported one to clear the message and continue printing. For more information, see the instruction sheet that came with the supply or see the "Replacing supplies" section of the *User's Guide*.

Note: If you do not have a replacement cartridge, then see the "Ordering supplies" section of the *User's Guide* or visit **www.lexmark.com**.

Replace unsupported imaging unit [32.xy]

Remove the imaging unit, and then install a supported one to clear the message and continue printing. For more information, see the instruction sheet that came with the supply or see the “Replacing supplies” section of the *User’s Guide*.

Note: If you do not have a replacement imaging unit, then see the “Ordering supplies” section of the *User’s Guide* or visit **www.lexmark.com**.

Restore held jobs?

Try one or more of the following:

- From the printer control panel, select **Restore** to restore all held jobs stored in the printer hard disk. For non-touch-screen printer models, press ✓ to confirm.
- From the printer control panel, select **Do not restore** if you do not want any print jobs to be restored. For non-touch-screen printer models, press ✓ to confirm.

Scanner automatic feeder cover open

Close the ADF cover.

Scanner disabled by admin [840.01]

Print without the scanner, or contact your system support person.

Scanner disabled. Contact system administrator if problem persists. [840.02]

From the printer control panel, try one or more of the following:

- Select **Continue with scanner disabled** to return to the home screen, and then contact your system support person.
- Select **Reboot and automatically enable scanner** to cancel the job.

  Note: This attempts to enable the scanner.
- For non-touch-screen printer models, press ✓ to confirm.

Scanner jam, remove all originals from the scanner [2yy.xx]

Remove the jammed paper from the scanner.

Scanner jam, remove jammed originals from the scanner [2yy.xx]

Remove the jammed paper from the scanner.

Serial option [x] error [54]

Try one or more of the following:

- Make sure that the serial cable is properly connected and is the correct one for the serial port.
- Make sure that the serial interface parameters (protocol, baud, parity, and data bits) are set correctly on the printer and computer.
- From the printer control panel, select **Continue** to continue printing. For non-touch-screen printer models, press to confirm.
- Turn off the printer, and then turn it back on.

SMTP server not set up. Contact system administrator.

From the printer control panel, select **Continue** to clear the message. For non-touch-screen printer models, press to confirm.

Note: If the message appears again, then contact your system support person.

Some held jobs were not restored

From the printer control panel, select **Continue** to delete the specified job. For non-touch-screen printer models, press to confirm.

Note: Held jobs that are not restored stay in the printer hard disk and are inaccessible.

Standard network software error [54]

Try one or more of the following:

- From the printer control panel, select **Continue** to continue printing. For non-touch-screen printer models, press to confirm.
- Turn off the printer and then turn it back on.
- Update the network firmware in the printer or print server. For more information, contact customer support.

Standard USB port disabled [56]

From the printer control panel, select **Continue** to clear the message. For non-touch-screen printer models, press to confirm.

Notes:

- The printer discards any data received through the USB port.
- Make sure the USB Buffer menu is not set to Disabled.

Supply needed to complete job

Do either of the following:

- Install the missing supply to complete the job.
- Cancel the current job.

Too many flash options installed [58]

1. Turn off the printer.
2. Unplug the power cord from the electrical outlet.
3. Remove the extra flash memory.
4. Connect the power cord to a properly grounded electrical outlet.
5. Turn the printer back on.

Too many trays attached [58]

1. Turn off the printer.
2. Unplug the power cord from the electrical outlet.
3. Remove the extra trays.
4. Connect the power cord to a properly grounded electrical outlet.
5. Turn the printer back on.

Unformatted flash detected [53]

Try one or more of the following:

- From the printer control, select **Continue** to stop the defragmentation and continue printing. For non-touch-screen printer models, press ✓ to confirm.
- Format the flash memory.

Note: If the error message remains, then the flash memory may be defective and need to be replaced.

Weblink server not set up. Contact system administrator.

Select **Continue** to clear the message. For non-touch-screen printer models, press ✓ to confirm.

Note: If the message appears again, then contact your system support person.

User attendance messages (0–99.99)

User attendance messages (0-99.99)

Error code	Description	Action
31.40	Toner cartridge smart chip error	**1** Make sure that the toner cartridge is properly installed. **2** Check if the toner cartridge is supported. Replace with a supported toner cartridge if necessary. **3** If the problem remains, go to **"Toner cartridge smart chip contact service check" on page 93**.
31.41	Toner cartridge I2C packet timeout	
31.42	Toner cartridge I2C packet has been sent but code timed-out on receiving the data (callback)	
31.43	Toner cartridge security error in the send challenge sequence	
31.44	Toner cartridge ROM signature error	
31.45	Toner cartridge stuck busy (Status register and/or CRI Arbiter register report busy)	
31.60	Imaging unit smart chip error	**1** Make sure that the imaging unit is properly installed. **2** Check if the imaging unit is supported. Replace with a supported imaging unit if necessary. **3** If the problem remains, go to **"Imaging unit smart chip contact service check" on page 93**.
31.61	Imaging unit I2C packet timeout	
31.62	Imaging unit I2C packet has been sent but code timed-out on receiving the data (callback)	
31.63	Imaging unit security error in the send challenge sequence	
31.64	Imaging unit ROM signature error	
31.65	Imaging unit stuck busy (status register and/or CRI Arbiter register report busy)	
31.66	Toner failed to replenish into the imaging unit	
32.10	Toner cartridge smart chip compatibility error	**1** Check if the toner cartridge is supported. Replace with a supported toner cartridge if necessary. **2** Check if the firmware level is compatible with the printer serial number. Flash with the correct firmware level if necessary. **3** If problem remains, contact next level of support.
32.11	Imaging unit smart chip compatibility error	**1** Check if the imaging unit is supported. Replace with a supported imaging unit if necessary. **2** Check if the firmware level is compatible with the printer serial number. Flash with the correct firmware level if necessary. **3** If problem remains, contact next level of support.

Error code	Description	Action
34	Media size mismatch (too short or too narrow)	**1** Make sure the media size setting matches the paper in the tray. **2** Restore the engine settings to their defaults: **Diagnostics Menu** > **Printer Setup** > **Defaults** **3** Restore the EP setup settings to their defaults: **Diagnostics Menu** > **EP Setup** > **Defaults** **4** If the problem remains, go to **"Media size mismatch service check" on page 94**.
35	Res save off deficient memory	**1** Disable the Resource save feature: **Settings** > **Print Settings** > **Setup Menu** > **Resource Save** > **Off** **2** If the problem remains, go to **"Insufficient memory service check" on page 95**.
37	Insufficient collation area	
38	Memory full	
42	Printer/cartridge mismatch	**1** Check if the toner cartridge is supported. Replace with a supported toner cartridge if necessary. **2** If the problem remains, go to **"Printer/cartridge mismatch service check" on page 95**.
52	Flash full	Format the flash memory: **Settings** > **Print Settings** > **Utilities** > **Format Flash** If the problem remains: **1** Remove the installed memory, and reset the printer. If the problem does not reoccur, replace the memory card. **2** If the problem remains, replace the controller board.
54	Network error	Make sure the printer is properly setup on the network. If the problem remains: **1** Remove the wireless network option, and reset the printer. If the problem does not reoccur, replace the wireless network option. **2** If the problem remains, replace the controller board.
80	Maintenance kit	Replace the maintenance kit, and then reset the Maintenance counter.
84	Imaging unit low	**1** Replace the imaging unit. **2** Make sure the imaging unit smart chip contact cable is properly connected to the controller board. **3** Make sure the contacts are free of debris. **4** Check the contacts for damaged pins. If damaged, replace the printer. **5** If the contacts are free of damage, contact your next level of support.

Error code	Description	Action
88	Toner cartridge low	**1** Make sure the toner cartridge smart chip contact cable JARW1 is properly connected to the controller board. **2** Make sure the contacts are free of debris. **3** Check the contacts for damaged pins. If damaged, replace the toner cartridge smart chip contact. **4** If the contacts are free of damage, contact your next level of support.

Toner cartridge smart chip contact service check

Action	Yes	No
Step 1 Check the cable JARW1 for proper connection to the controller board. Is it properly connected?	Go to step 2.	Reseat the cable.
Step 2 Check the toner cartridge smart chip contact for damaged pins. Is it free of damage?	Replace the controller board. See **"Controller board removal" on page 231**.	Replace the toner cartridge smart chip contact. See **"Toner cartridge smart chip contact removal" on page 236**.

Imaging unit smart chip contact service check

Action	Yes	No
Step 1 Check the cable JARW2 for proper connection to the controller board. Is it properly connected?	Go to step 2.	Reseat the cables.
Step 2 Check the imaging unit smart chip contact for damaged pins. Is it free of damage?	Replace the controller board. See **"Controller board removal" on page 231**.	Replace the printer.

Media size mismatch service check

Action	Yes	No
Step 1 Check the input tray for damage. Is it free of damage?	Go to step 2.	Replace the input tray.
Step 2 **a** Make sure the index sensor is free of debris. **b** Check it for damage. Is it free of damage?	Go to step 3.	Replace the index sensor. See **"Index sensor removal" on page 279**.
Step 3 **a** Make sure the trailing edge sensor is free of debris. **b** Check it for damage. Is it free of damage?	Go to step 4.	Replace the trailing edge sensor. See **"Trailing edge sensor removal" on page 282**.
Step 4 **a** Make sure the input sensor is free of debris. **b** POR into the Diagnostics menu and perform a sensor test: **Diagnostics Menu** > **Base Sensor Test** > **Input** Does the sensor state on the control panel display change when it is toggled?	Go to step 5.	Replace the input sensor. See **"Duplex sensor and input sensor removal" on page 275**.
Step 5 POR into the Diagnostics menu and perform a sensor test: **Diagnostics Menu** > **Base Sensor Test** > **Narrow Media** Does the sensor state on the control panel display change when it is toggled?	Go to step 6.	Replace the narrow media/bin full sensor. See **"Narrow media/bin full sensor removal" on page 302**.
Step 6 **a** Remove the main drive gearbox. **b** Check the gears for wear or damage. **c** Check the main drive motor for rotation. Are the gears free of wear or damage and does the main drive motor rotate?	Go to step 7.	Replace the main drive gearbox. See **"Main drive gearbox removal" on page 211**.
Step 7 Replace the controller board. Does the error remain?	Problem is solved.	Contact the next level of support.

Printer/cartridge mismatch service check

Action	Yes	No
Step 1 **a** Make sure the toner cartridge smart chip contact cable JARW1 is properly connected to the controller board. **b** Make sure the toner cartridge smart chip contact is free of debris. **c** Check the toner cartridge smart chip contact for damaged pins. Is it free of damage?	Go to step 2.	Replace the toner cartridge smart chip contact. See **"Toner cartridge smart chip contact removal" on page 236**.
Step 2 Check if the firmware level matches the serial number. Do they match?	Replace the controller board. See **"Controller board removal" on page 231**.	Reflash the firmware.

Insufficient memory service check

Action	Yes	No
Step 1 Check the memory card for proper installation. Is it properly installed?	Go to step 2.	Reseat the memory card.
Step 2 **a** Print the Menu settings page: **Settings** > **Reports** > **Menu Settings Page** **b** POR into the Configuration menu and reset the printer's settings to factory default: **Configuration Menu** > **Factory Defaults** > **Restore Base** **c** Remove the memory card. **d** Restart the printer. Does the error remain?	Replace the controller board. See **"Controller board removal" on page 231**.	Replace the memory card.

Printer hardware errors

1xx error messages

Error code	Description	Action
111.00	Pel clock check failed.	Go to **“111.xx LSU service check” on page 100**.
111.01	Downlevel ASIC detected.	
111.31	Printhead never delivered HSYNCs.	
111.32	Printhead lost HSYNCs.	
111.40	Wrong printhead installed	
111.50	Open-loop printhead error, open-loop sweep state.	
111.51		
111.52	Open-loop printhead error, check prelim amp state.	
111.53	Open-loop printhead error, enable amp Kp state.	
111.54	Closed-loop printhead error, amp Kp failed to converge.	
111.55	Closed-loop printhead error while waiting for amp Kp to converge.	
111.56	Closed-loop printhead error, amp Ki failed to converge.	
111.57	Closed-loop printhead error while waiting for amp Ki to converge.	
111.58	Closed-loop printhead error, load scan regs state.	
111.59	Closed-loop printhead error, forward and reverse capture times differ by too much.	
111.60	Closed-loop printhead sweep error, check sweep accuracy state.	
111.61	Printhead drive control out of range due to an external event beyond what the control is designed to handle.	
111.62	Closed-loop printhead error, off-resonant PI effort state.	
111.63	Timed out on POR sweep.	
111.64	Attempted to exceed open loop drive limits.	
111.65		
111.66	Failed alignment of printhead.	
111.67		
111.68	Too many fake HSYNCs while aligning printhead.	
111.69		

Error code	Description	Action
121.07	Fuser has been on for more than allowed after a gap blowout, and the temperature is still too cold.	**1** Restore the engine settings to their defaults: **Diagnostics Menu** > **Printer Setup** > **Defaults** **2** Restore the EP setup settings to their defaults: **Diagnostics Menu** > **EP Setup** > **Defaults** **3** If the problem remains, go to **"Fuser service check" on page 100**.
121.08	Fuser was under temp when page was in fuser.	
121.20	Fuser undertemp during steady state control. Can ocurr in printing or standby modes.	
121.22	Fuser did not warm enough to start line voltage detection.	
121.23	Fuser took too long to heat to line detection temp.	
121.24	Fuser never reached detection temperature.	
121.25	After line voltage detection, control did not roll over to steady state control in time.	
121.26	Failed to reach temperature during warm up.	
121.28	Failed to reach EP warm up temperature in time.	
121.29	Fuser failed to reach pre-heat temperature for motor start during warm up.	
121.30	Fuser failed to reach printing temperature by the time a page reached the fuser.	
121.31	Fuser is too hot. Global overtemp check.	
121.32	Open fuser main thermistor.	
121.33	Open fuser edge thermistor.	
121.34	Open fuser backup roll thermistor.	
121.35	Attempting to POR after receiving a 121.34.	
121.36	Fuser did not heat to allow compression jog.	
121.37	Fuser heated faster than allowed during line voltage detection.	
126.01	Line frequency outside operating range of device.	**1** Check the power cord for continuity. Replace if necessary. **2** Make sure the nominal voltage source is within specification. See **"Electrical specifications" on page 379**. **3** If the problem remains, go to **"LVPS service check" on page 101**.
126.02	No line frequency detected.	

Error code	Description	Action
132.01	TDS baseline too low.	Go to **“Toner density sensor service check” on page 101**.
132.02	TDS baseline too high.	
132.03	TDS baseline excessive range.	
132.16	TDS calibration at maximum.	
132.17	TDS calibration too low.	
132.18	TDS calibration too close to baseline.	
132.32	PC drum measurement too high.	
132.33	PC drum measurement too different from calibration.	
132.34	PC drum measurement too close to baseline.	
133.05	CTLS reading above maximum expected value.	Go to **“CTLS service check” on page 102**.
133.06	CTLS reading below minimum expected value.	
133.08	Excessive CTLS noise.	
140.10	Transport motor halls not detected.	Go to **“Main drive gearbox service check” on page 102**.
140.20	Transport motor took too long to stop.	
140.30	Transport motor unable to lock (before motor ID).	
140.40	Transport motor overspeed detected.	
140.60	Transport motor unable to lock (after motor ID).	
140.70	Transport motor out of lock detected.	
140.80	Transport motor excessive PWM or overtemp.	
146.00	Autocomp Pick/Lift Motor—Encoder Never Detected in tray 1.	Go to **“Tray 1 pick/lift motor gearbox service check” on page 104**.
155.00	No encoder received from auger motor.	Go to **“Cartridge gearbox service check” on page 103**.
171.03	Fuser fan error.	Go to **“171.xx Cooling fan service check” on page 104**.
171.04		
171.05		
171.06		
171.07		

111.xx LSU service check

Action	Yes	No
Step 1 Check the LSU cables JLSU1 and J6 for proper connection. Are they properly connected?	Go to step 2.	Reseat the cables.
Step 2 Inspect the LSU cables and connectors. Are they free of damage?	Replace the controller board. See **"Controller board removal" on page 231**.	Replace the LSU. See **"Laser scanning unit (LSU) removal" on page 309**.

Fuser service check

Action	Yes	No
Step 1 • Check the fuser cables JTHERM1 and JEXIT for proper connection to the controller board. • Check the cable PCN5 for proper connection to the power supply. Are they properly connected?	Go to step 2.	Reseat the cables.
Step 2 Are the cables JTHERM1, JEXIT and PCN5 free of damage?	Go to step 3.	Replace the fuser. See **"Fuser removal" on page 305**.
Step 3 **a** Turn off the printer. **b** Remove the rear door and cover. **c** Disconnect the fuser cable connected to PCN5 of the power supply. **d** Check for approximate correct resistance on the fuser cable: • 220V fuser—43 ohms • 110V fuser—10 ohms • 100V fuser—8 ohms Is the resistance equal to any of the above values?	Perform an LVPS service check. See **"LVPS service check" on page 101**.	Replace the fuser. See **"Fuser removal" on page 305**.
Step 4 Check the fuser rollers, belts and gears for damage and debris. Are they free of damage and debris?	Perform a cooling fan service check and LVPS service check. See **"171.xx Cooling fan service check" on page 104** and **"LVPS service check" on page 101**.	Replace the fuser. See **"Fuser removal" on page 305**.

LVPS service check

Action	Yes	No
Step 1 Check if the power supply cable is properly connected to the controller board. Is it properly connected?	Go to step 2.	Reseat the cables.
Step 2 **a** Turn off the printer. **b** Remove the power cord. **c** Measure the resistance between terminals A and D of the power supply socket. Is the resistance approximately 30 ohms?	Contact your next level of support.	Replace the power supply. See **"Power supply removal" on page 272**.

Toner density sensor service check

Action	Yes	No
Step 1 Remove the transfer roll, and check for loose toner blocking the toner density sensor. Is it free of loose toner?	Go to step 2.	Clean the sensor.
Step 2 Check the TDS for proper operation: **a** Lower the ACM assembly. **b** Move the toner density sensor wiper from left to right. Does it move freely?	Go to step 3.	Reinstall the wiper properly. If it still cannot move freely, replace the toner density sensor. See **"Toner density sensor removal" on page 282**.
Step 3 Check the cable JTDS for proper connection. Is it properly connected?	Go to step 4.	Reseat the cable.
Step 4 Check the cable JTDS for damage and pinch points. Is it free of damage?	Replace the controller board. See **"Controller board removal" on page 231**.	Replace the toner density sensor. See **"Toner density sensor removal" on page 282**.

CTLS service check

Action	Yes	No
Step 1 Check for loose toner blocking the CTLS. Is it free of any loose toner?	Go to step 2.	Clean the CTLS.
Step 2 • Check the cable PCN3 for proper connection to the power supply. • Check the CTLS cable for proper connection to the controller board. Are they properly connected?	Go to step 3.	Reseat the cables.
Step 3 Check the cable PCN3 and CTLS cable for damage. Are they free of damage?	Replace the controller board. See **"Controller board removal" on page 231**.	Replace the printer.

Main drive gearbox service check

Action	Yes	No
Step 1 Remove the main drive gearbox and check for any debris. Is it free of debris?	Go to step 2.	Remove the debris.
Step 2 Check the gears of main drive gearbox for wear or damage. Are they free of wear or damage?	Go to step 3.	Replace the main drive gearbox. See **"Main drive gearbox removal" on page 211**.
Step 3 Check the main drive motor for proper operation: **a** Remove the main drive gearbox. **Note:** Do not disconnect the main drive gearbox cable. **b** POR into the Diagnostics menu and perform a feed test: **Diagnostics Menu** > **Input Tray Tests** > **Feed Test** > Select any input source **c** Check if the main drive motor rotates when doing the feed test. Does it rotate when doing the feed test?	Replace the controller board. See **"Controller board removal" on page 231**.	Replace the main drive gearbox. See **"Main drive gearbox removal" on page 211**.

ACM service check

Action	Yes	No
Step 1 Check the pick/lift motor gearbox for proper operation. **a** POR into the Diagnostics menu and perform a feed test: **Diagnostics Menu** > **Input Tray Tests** > **Feed Test** > **Tray 1** **b** Check if the pick/lift motor gearbox rotates on each pick. Does it rotate during the feed test?	Go to step 2.	Replace the pick/lift motor gearbox. See **"Pick/lift motor gearbox removal" on page 297**.
Step 2 Lower the ACM assembly, and rotate the pick roller toward the front without touching the pick tire. Does it rotate properly?	Replace the controller board. See **"Controller board removal" on page 231**.	Replace the ACM assembly. See **"ACM assembly removal" on page 288**.

Cartridge gearbox service check

Action	Yes	No
Step 1 Check the gear on the toner cartridge for wear or damage. Is it free of wear or damage?	Go to step 2.	Replace the toner cartridge.
Step 2 Check the gears on the cartridge gearbox for proper rotation and for wear or damage. Does it rotate properly and is it free of wear or damage?	Go to step 3.	Replace the cartridge gearbox. See **"Cartridge gearbox removal" on page 224**.
Step 3 Check the cartridge gearbox cable for proper connection to the controller board. Is it properly connected?	Go to step 4.	Reseat the cable.
Step 4 Check the cartridge gearbox cable for damage. Is it free of damage?	Replace the controller board. See **"Controller board removal" on page 231**.	Replace the cartridge gearbox. See **"Cartridge gearbox removal" on page 224**.

Tray 1 pick/lift motor gearbox service check

Action	Yes	No
Step 1 **a** Remove Tray 1. **b** Check the lift plate and gears for proper operation by moving the metal plate. Do the lift plate and gears move freely, and are they free of wear or damage?	Go to step 2.	Replace the tray insert.
Step 2 Check the pick/lift motor gearbox for the following: • Gear tooth breakage • Freedom of rotation Is it free of wear or damage?	Go to step 3.	Replace the pick/lift motor gearbox. See **"Pick/lift motor gearbox removal" on page 297**.
Step 3 Check the cable JLIFT1 on the controller board. Is it properly connected and free of damage?	Go to step 4.	Replace the pick/lift motor gearbox. See **"Pick/lift motor gearbox removal" on page 297**.
Step 4 Replace the controller board. Does this fix the problem?	The problem is solved.	Contact the next level of support.

171.xx Cooling fan service check

Action	Yes	No
Step 1 **a** Make sure that the cable JFAN1 is properly connected to the controller board. **b** Check if the cooling fan is rotating properly. Is it rotating properly?	Go to step 2.	Replace the cooling fan. See **"Cooling fan removal" on page 230**.
Step 2 **a** Turn off the printer, and disconnect JFAN1 from the controller board. **b** Turn on the printer, and measure the voltage across JFAN1. Is the voltage approximately 24 V?	Go to step 3.	Replace the controller board. See **"Controller board removal" on page 231**.
Step 3 Is the fan idle?	Replace the cooling fan. See **"Cooling fan removal" on page 230**.	The problem is solved.

9xx error messages

Error code	Description	Action
900.xx	RIP firmware errors	Go to **“System software error service check” on page 108**.
912.xx	Unrecoverable Engine firmware error	POR the machine. If the error re-occurs, then update the firmware. If the error continues occurring, then replace the controller board. Go to **“Controller board removal” on page 231**.
940.xx	RIP to engine communication failure—the zero crossing signal used for fuser control in the low voltage (LV) power supply has failed, or the wrong low voltage power supply has been installed.	Check the LVPS. Go to **“LVPS service check” on page 101**.
948.xx	Failed engine card—pel clock check failed.	Replace the controller board. Go to **“Controller board removal” on page 231**.
949.xx	Failed engine card—delay line calibration failure.	
950.xx	NVRAM mismatch failure—mismatch between controller board EEPROM and control panel mirror. ".xx" codes: • 00-29— mismatch between system and mirror • 30-60—mismatch between secure and system	**Warning—Potential Damage:** When replacing any of the following components: • Control panel assembly • Controller board assembly Replace only one component at a time. Replace the required component and perform a POR before replacing a second component listed above. If this procedure is not followed, the printer will be rendered inoperable. Never replace two or more of the components listed above without a POR after installing each one or the printer will be rendered inoperable. Never install and remove components listed above as a method of troubleshooting components. Once a component has been installed in a machine, it can not be used in another machine. It must be returned to the manufacturer. Go to **“NVRAM mismatch failure service check” on page 112**.
952.xx	A recoverable NVRAM Cyclic Redundancy Check (CRC) error occurred—n is the offset at which the error occurred.	POR the printer.

Error code	Description	Action
953.xx	NVRAM chip failure with mirror part	Replace the controller board. Go to **“Controller board removal” on page 231**.
954.xx	NVRAM chip failure with system part	
955.xx	The Code ROM or NAND flash failed the Cyclic Redundancy Check (CRC) or the NAND experienced an uncorrectible multi-bit failure.	
956.xx	RIP card failure—processor failure	
956.01	Processor Overtemp	
957.xx	RIP card failure—ASIC failure	
958.xx	Controller Board NAND Failure—printer has performed more than 100 shift and reflash operations as a result of ECC bit corrections.	
959.01	Controller verification failure of pensive boot code	Upgrade firmware. If that fails, replace the controller board. Go to **“Controller board removal” on page 231**.
959.02	Failure to authenticate Signature Verification Code	
959.03	Signature Verification Code failed to authenticate a code partition	
959.04	Jump to unverified address	
959.05	Unknown Boot Failure	
959.20	Pensive hardware failure	Replace the controller board. Go to **“Controller board removal” on page 231**.
959.21	Pensive did not respond to command request	Replace the controller board. Go to **“Controller board removal” on page 231**.
959.22	Challenge Secret Failure	
959.23	Pensive self test failed during initialization	
959.24	EEPROM Retention Error (Write failure)	
959.25	Insufficient device space during HW prog	
959.26	Incremental counter reset exceeds maximum value	
959.27	Increment count failed due to max value limit	
959.28	Invalid SP Memory Configuration	

Error code	Description	Action
959.30	Pensive library flagged an invalid argument(s)	Replace the controller board. Go to **"Controller board removal" on page 231**.
959.31	Pensive library flagged an invalid device address	
959.32	Failure to init physical interface	
959.33	Unknown/unexpected Error	
959.34	System Pensive Bus Busy Error	
959.35	Transmission Error	
959.36	Pensive command is invalid due to unlocked device status	
959.37	Pensive command is invalid due to locked device status	
959.38	Incremental counter id(s) are invalid	
959.39	Invalid NV address	
959.40	Invalid Pensive command	Replace the controller board. Go to **"Controller board removal" on page 231**.
960.xx	RAM Memory Error—RAM soldered on the card is bad	
961.xx	RAM Memory Error—optional DRAM is bad	Replace the bad memory card.
964.xx	Download Emulation Cyclic Redundancy Check (CRC) Error—checksum failure detected in the emulation header or emulation file.	**1** Disable the Download Emulation. **2** Program the download emulation into the firmware card again. **3** If the above steps do not resolve the problem, then replace the firmware card and download the emulation again.
975.xx	Network Error—unrecognizable network port	Call the next level of support.
976.xx	Network Error—unrecoverable software error in network port	
978.xx	Network Error—bad checksum while programming network port	
979.xx	Network Error—flash parts failed while programming network port	
980.xx	Engine experiencing unreliable communication with the specified device	Call the next level of support.
981.xx	Engine protocol violation detected by the specified device	
982.xx	Communications error detected by the specified device—device can be: • Engine, Duplex, Tray x, Env Feeder • Output Bin x (Note: Used for single bin devices) • Bins x to y (Note: Used for multiple bin devices)	
983.xx	Invalid command received by the specified device	
984.xx	Invalid command parameter received by the specified device	

Error code	Description	Action
990.xx	An equipment check condition has occurred in the specified device, but the device is unable to identify the exact component failure—device can be: • Engine, Duplex, Tray x, Env Feeder • Output Bin x (Note: Used for single bin devices) • Bins x to y (Note: Used for multiple bin devices)	Call the next level of support.
991.xx	The specified device has detected an equipment check in its controller board—device can be: • Engine, Duplex, Tray x, Env Feeder • Output Bin x (Note: Used for single bin devices) • Bins x to y (Note: Used for multiple bin devices)	

System software error service check

There are different types of 900.xx errors that can occur. There may be a communication problem (bad cable, network connection, and so on) software issue, or a hardware problem with the controller board, or ISP (internal solutions port). The communication and software aspects should be checked first. Determine if the problem is constant or intermittent. Use the troubleshooting procedure below to isolate the issue. Take any notes as instructed. You will need that information in the event you need to contact your next level of support.

Note: Before troubleshooting, determine the operating system used when the error occurred. If possible determine whether a PostScript or PCL file was sent to the device when the error occurred. Ask the customer which Lexmark Solutions applications are installed on the device.

Action	Yes	No
Step 1 POR the printer. Does the error remain?	Go to step 2.	The problem is solved.
Step 2 **a** Write down the exact 900.xx error code displayed on the device. **b** Turn off the printer. **c** Clear the print queues. **d** Disconnect all communication cables, and remove all memory options. **e** Remove any installed ISP. **f** POR the printer into the Diagnostics menu. Does the error remain during startup?	Go to step 3.	Go to step 6.
Step 3 Check all the cables connected to the controller board for proper connectivity. Are the cables properly connected?	Go to step 5.	Go to step 4.

Action	Yes	No
Step 4 **a** Properly connect the cables to the controller board. **b** POR the printer into the Diagnostics menu. Does the error remain during startup?	Go to step 5.	Go to step 6.
Step 5 **a** Replace the controller board. **b** POR the printer. Does the error remain during startup? **Note:** If an error different from the original 900.xx is displayed, consult the service check for that error.	Go to step 31.	The problem is solved.
Step 6 Print the following: • Error log • Menu settings page • Network settings page Does the error remain while these pages were printing?	Go to step 31.	Go to step 7.
Step 7 **Note:** Before performing this step, write down the following information about the file being sent to the printer: • Application used • Operating system • Driver type • File type (PCL, PostScript, XPS, etc.) **a** Reattach the communications cable. **b** POR the printer. **c** Send the printer a print job. Does the error remain?	Go to step 8.	Go to step 10.
Step 8 **a** POR the printer. **b** Send a different print job to the printer. Does the error remain?	Go to step 9.	Go to step 10.

Action	Yes	No
Step 9 **a** Upgrade the firmware. **Note:** Contact your next level of support for the correct firmware level to use. **b** POR the printer. **c** Send the printer a print job. Does the error remain?	Go to step 31.	Go to step 10.
Step 10 Is the device an MFP?	Go to step 11.	Go to step 13.
Step 11 Run a copy job. Does the error remain?	Go to step 31.	Go to step 12.
Step 12 Run a scan to PC job. Does the error remain?	Go to step 31.	Go to step 13.
Step 13 Is there optional memory installed?	Go to step 14.	Go to step 16.
Step 14 **a** Reinstall the memory. **b** Send a print job to the printer. Does the error remain?	Go to step 15.	Go to step 16.
Step 15 **a** Install a Lexmark recommended memory option. **b** Send a print job to the printer. Does the error remain?	Go to step 31.	The problem is solved.
Step 16 Is there a modem installed?	Go to step 17.	Go to step 21.
Step 17 **a** Reinstall the modem. **b** POR the printer. Does the error remain?	Go to step 18.	Go to step 20.

Action	Yes	No
Step 18 **a** Upgrade the firmware if it was not upgraded in a previous step. **Note:** Contact your next level of support for the correct firmware level to use. **b** POR the printer. **c** Send the printer a print job. Does the error remain?	Go to step 19.	The problem is solved.
Step 19 **a** Replace the modem. **b** POR the printer. Does the error remain?	Go to step 31.	The problem is solved.
Step 20 Run a fax job. Does the error remain?	Go to step 31.	Go to step 21.
Step 21 Is there an ISP option installed?	Go to step 22.	The problem is solved.
Step 22 **a** Reinstall the first ISP option. **b** POR the printer. Does the error remain?	Go to step 24.	Go to step 23.
Step 23 Run a job to test the option. Does the error remain?	Go to step 24.	Go to step 26.
Step 24 **a** Upgrade the firmware if it was not upgraded in a previous step. **Note:** Contact your next level of support for the correct firmware level to use. **b** POR the printer. **c** Send the printer a print job. Does the error remain?	Go to step 25.	The problem is solved.
Step 25 **a** Replace the faulty ISP option. **b** POR the printer. Does the error remain?	Go to step 31.	Go to step 26.

Action	Yes	No
Step 26 Are there any more ISP options to install?	Go to step 27.	The problem is solved.
Step 27 **a** Install the next ISP option. **b** POR the printer. Does the error remain?	Go to step 29.	Go to step 28.
Step 28 Run a job to test the option. Does the error remain?	Go to step 29.	Go to step 26.
Step 29 **a** Upgrade the firmware if it was not upgraded in a previous step. **Note:** Contact your next level of support for the correct firmware level to use. **b** POR the printer. **c** Send the printer a print job. Does the error remain?	Go to step 30.	Go to step 26.
Step 30 **a** Replace the faulty ISP option. **b** POR the printer. Does the error remain?	Go to step 31.	Go to step 26.
Step 31 Contact your next level of support. You will need the following information: • Exact 900.xx error digits and complete error message • Printed menu settings page • Printed network settings page • Device error log • A sample print file if the error appears to be isolated to a single file • File/Application used if the error is related to specific print file • Device operating system • Driver used (PCL/PS) • Frequency of the occurrence of the error		

NVRAM mismatch failure service check

Warning—Potential Damage: When replacing any of the following components:

- Control panel assembly
- Controller board assembly

Replace only one component at a time. Replace the required component and perform a POR before replacing a second component listed above. If this procedure is not followed, the printer will be rendered inoperable. Never replace two or more of the components listed above without a POR after installing each one or the printer will be rendered inoperable.

Warning—Potential Damage: These components can be used as a method of troubleshooting as long as the machine is booted into diagnostic mode or is operating in diagnostic mode. Once a component has been installed in a machine and powered up into user mode, it cannot be used in another machine. It must be returned to the manufacturer.

Action	Yes	No
Step 1 Check the control panel assembly. Was the control panel assembly recently replaced?	Go to step 3.	Go to step 2.
Step 2 Check the controller board assembly. Was the controller board assembly recently replaced?	Go to step 4.	Contact next level of support.
Step 3 Replace the current control panel assembly with the control panel assembly. Go to **“Control panel assembly removal” on page 249**. Does the error remain?	Go to step 5.	The problem is solved.
Step 4 Replace the current controller board assembly with the original controller board assembly. Go to **“Controller board removal” on page 231**. Does the problem continue?	Go to step 6.	The problem is solved.
Step 5 Replace the original control panel assembly with a new and not previously installed control panel assembly. Does the error continue?	Contact the next level of support.	The problem is solved.
Step 6 Replace the original control panel assembly with a new and not previously installed control panel door assembly. Does the error continue?	Contact the next level of support.	The problem is solved.

Base printer symptoms

Symptom	Action
Buttons on the control panel failed to respond	Go to **“Control panel button service check” on page 117**.
No Display	Go to **“Control panel service check” on page 116**.
Fuser parts melted	Go to **“LVPS service check” on page 101**.
Printer not communicating with host	Go to **“USB print service check” on page 118**. If the printer is network-attached, then go to **“Network service check” on page 120**.
Machine does not POR (no power)	Go to **“Dead machine service check” on page 114**.
False `Close front door` displayed.	Go to **“Front door not closed service check” on page 119**.

Dead machine service check

Action	Yes	No
Step 1 Is the machine plugged in?	Go to step 3.	Go to step 2.
Step 2 Plug the machine in. Did this fix the problem?	The problem is solved.	Go to step 3.
Step 3 Check the power cord for continuity. Is there continuity?	Go to step 4.	Replace the power cord.
Step 4 Check the AC line voltage to the machine. The voltage should be within the following limits: • for 110 machines—100 to 127 V ac • for 220 V machines—200 to 240 V ac Is the voltage within the limits?	Go to step 5.	Try a different outlet.

Action	Yes	No
Step 5 Check the voltages on the LVPS card. • +5V at pins 17 and 19 • +24V at pins 11, 13 and 15 Are the voltages correct?	Go to the controller board service check. Go to **"Controller board service check" on page 115**.	Replace the LVPS. Go to **"Power supply removal" on page 272**.

Controller board service check

Service checks which involve measuring voltages on the LVPS/HVPS (low voltage power supply/high voltage power supply) board should be performed with the printer positioned on its back side.

Note: When making voltage readings, always use frame ground unless another ground is specified. See the wiring diagram in the back of the book for more information.

Warning—Potential Damage: Do not replace the operator panel and controller board at the same time. Each card contains the printer settings. When either of these cards is new, it obtains some of the settings from the other card. Settings are lost when both are new and replaced at the same time.

Action	Yes	No
Step 1 POR the machine. Did the control panel , fuser, fan and drive motor function at startup?	Go to step 2.	Go to step 3.
Step 2 Run some print jobs. Did any errors occur?	There is no issue.	Go to step 3.
Step 3 Check the cables on the controller board. Are they connected properly?	Go to step 5.	Go to step 4.
Step 4 Properly connect all the cables on the controller board. Did this fix the issue?	The problem is solved.	Go to step 5.
Step 5 Check the power coming to the controller from the power supply. Verify the following voltages: • +5V at pins 17 and 19 • GND at pins 18, 20 • +24V at pins 11, 13 and 15 Are the voltages correct?	Go to step 7.	Go to step 6.

Action	Yes	No
Step 6 Replace the power supply. Did this ix the problem?	The problem is solved.	Go to step 7.
Step 7 Is the control panel functioning properly?	Go to step 9.	Go to control panel service check. Go to **"Control panel service check" on page 116**
Step 8 Perform the control panel service check. Go to **"Control panel service check" on page 116**. Did this solve the problem?	The problem is solved.	Go to step 9.
Step 9 Is the LED on the bottom of the board illuminating?	Go to step 10.	Replace the controller board. Go to **"Controller board removal" on page 231**.
Step 10 Verify the controller board power outputs. See **"Controller board" on page 341** for voltages from the controller. Are the voltages correct?	Contact your second level of support.	Replace the controller board. Go to **"Controller board removal" on page 231**.

Control panel service check

Warning—Potential Damage: Do not replace the operator panel and controller board at the same time. Each card contains the printer settings. When either of these cards is new, it obtains some of the settings from the other card. Settings are lost when both are new and replaced at the same time.

Action	Yes	No
Step 1 Check the conections on the UICC and controller board for proper connections. Are they properly connected?	Go to step 3.	Go to step 2.
Step 2 Properly connect the connectors. Did this fix the problem?	The problem is solved.	Go to step 3.
Step 3 Is the display blank, but LEDs on the panel are functioning?	Go to step 4.	Go to step 5.

Action	Yes	No
Step 4 Replace the display. Go to **“Display removal (MX410, MX51x)” on page 256**. Did this fix the problem?	The problem is solved.	Go to step 5.
Step 5 Replace the cable connecting the UICC to the controller board. Did this fix the problem?	The problem is solved.	Go to step 6.
Step 6 Replace the UICC. Go to **“UICC removal” on page 252**. Did this fix the problem?	The problem is solved.	Go to step 7.
Step 7 Replace the controller board. Go to **“Controller board removal” on page 231**. Did this fix the problem?	The problem is solved.	Contact the next level of support.

Control panel button service check

Action	Yes	No
Step 1 Are the display and LEDs on the control panel illuminated?	Go to step 2.	Perform control panel service check. Go to **“Control panel service check” on page 116**.
Step 2 Enter Diagnostics mode and navigate to: **HARDWARE TESTS** >**Button Test** Did the device pass the test?	Go to step 4.	Go to step 3.
Step 3 Replace the UICC. Go to **“UICC (MX310) removal” on page 252**. Did this fix the problem?	The problem is solved.	Go to step 4.
Step 4 Replace the controller board. Go to **“Controller board removal” on page 231**. Did this fix the problem?	The problem is solved.	Contact the next level of support.

USB print service check

Action	Yes	No
Step 1 Enter Diagnostic mode and perform a print test to make sure the printer prints correctly. Verify that the indicator light is on, then print the Menu Settings Page, navigate to: **Reports** > **Menu Settings Page** Are the internal pages printing?	Go to step 2.	Go to step 7.
Step 2 Verify if the user's applications are setup correctly. Are they setup correctly?	Go to step 4.	Go to step 3.
Step 3 Try a different application to run a print job. Did the output print?	This is not a printer issue.	Go to step 4.
Step 4 Check the print driver. Is the correct driver being used and properly setup?	Go to step 6.	Go to step 5.
Step 5 Use a different driver. Did this fix the issue?	The problem is solved.	Go to step 6.
Step 6 Try a different USB cable. Did this fix the issue?	The problem is solved.	Go to step 7.
Step 7 Replace the controller board. Go to **“Controller board removal” on page 231**. Did this fix the issue?	The problem is solved.	Contact the next level support

Front door not closed service check

Action	Yes	No
Step 1 Open the the front access cover and inspect the interlock switch actuator. 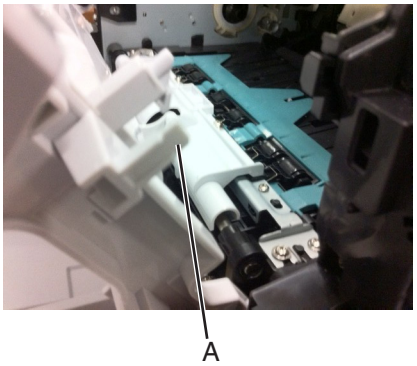 Is the actuator damaged?	Go to step 2.	Go to step 3.
Step 2 Replace the front access cover. See **“Front access cover removal” on page 265**. Did this resolve the issue?	The problem is solved.	Go to step 3.
Step 3 Inspect the switch on the front cover for dirt or debris that might keep the switch trigger from properly moving. Is there dirt or debris?	Go to step 4.	Go to step 5.
Step 4 Remove the debris. Did this resolve the issue?	The problem is solved.	Go to step 5.
Step 5 Check pin 2 on J44 for +3.3 V and pin 3 for GND. Are the voltages and grounds correct?	Go to step 6.	Go to step 7.
Step 6 Replace the interlock switch. Did this resolve the issue?	The problem is solved.	Go to step 7.
Step 7 Replace the controller board. See **“Controller board removal” on page 231**. Did this resolve the issue?	The problem is solved.	Contact the next level of support.

Network service check

Note: Before starting this service check, print out the network setup page. This page is found under **Menu** > **Reports** > **Network Settings**. Consult the network administrator to verify that the physical and wireless network settings displayed on the network settings page for the device are properly configured. If a wireless network is used, then verify that the printer is in range of the host computer or wireless access point, and there is no electronic interference. Have the network administrator verify that the device is using the correct SSID, and wireless security protocols. For more network troubleshooting information, consult the Lexmark Network Setup Guide.

Actions	Yes	No
Step 1 If the device is physically connected to the network, verify that the Ethernet cable is properly connected on both ends. Is the cable properly connected?	Go to step 3. If the network is wireless, then go to step 3.	Go to step 2.
Step 2 Connect the Ethernet cable. Does this fix the problem.	The problem is solved.	Go to step 3.
Step 3 Check the printer's online status under Printers and Faxes on the host computer. Delete all print jobs in the print queue. Is the printer online and in a Ready state?	Go to step 5.	Go to step 4.
Step 4 Change the printer status to online. Did this fix the issue?	The problem is solved.	Go to step 5.
Step 5 Does the IP address displayed on the network settngs page match the IP address in the port of the drivers using the printer?	Go to step 10.	Go to step 6.
Step 6 Does the LAN use DHCP? **Note:** A printer should use a static IP address on a network.	Go to step 7.	Go to step 9.
Step 7 Are the first two segments of the IP address 169.254	Go to step 8.	Go to step 9.
Step 8 POR the printer. Did this resolve the issue?	The problem is solved.	Go to step 10.
Step 9 Reset the address on the printer to match the IP address on the driver. Did this resolve the issue?	The problem is solved.	Go to step 10.

Actions	Yes	No
Step 10 Have the network admin verify that the printer and PC's IP address have identical subnet addresses. Are the subnet addresses the same?	Go to step 12.	Go to step 11.
Step 11 Using the subnet address supplied by the network administrator, assign a unique IP address to the printer. **Note:** The printer IP address should match the IP address on the printer driver. Did this fix the problem?	The problem is solved.	Go to step 12.
Step 12 Is the device physically connected (Ethernet cable) to the network?	Go to step 13.	Go to step 15.
Step 13 Try using a different Ethernet cable. Did this fix the problem?	The problem is solved.	Go to step 14.
Step 14 Have the network administrator check the network drop for activity. Is the network drop functioning properly?	Replace the controller board. See **"Controller board removal" on page 231**.	Contact the network administrator.
Step 15 Is the printer on the same wireless network as the other devices?	Go to step 17.	Go to step 16.
Step 16 Assign the correct wireless network to the printer. Did this fix the problem?	The problem is solved.	Go to step 17.
Step 17 Are the other devices on the wireless network communicating properly?	Go to step 18.	Contact the network administrator.
Step 18 Verify that the wireless card is properly seated on the controller board. Is the wireless card seated correctly?	Go to step 20.	Go to step 19.
Step 19 Properly reseat the wireless card. Did this fix the problem?	The problem is solved.	Go to step 20.
Step 20 If there is an attached antenna, is the antenna damaged?	Go to step 22.	Go to step 21.

Actions	Yes	No
Step 21 Replace the antenna. Did this fix the problem?	The problem is solved.	Go to step 22.
Step 22 Verify that the antenna is properly connected to the wireless card. Is it connected correctly?	Go to step 24.	Go to step 23.
Step 23 Properly connect the antenna. Did this fix the problem?	The problem is solved.	Go to step 24.
Step 24 Replace the wireless card. Did this fix the problem?	The problem is solved.	Go to step 25.
Step 25 Replace the controller board. See **"Controller board removal" on page 231**. Did this fix the problem?	The problem is solved.	Contact the next level of support.

Input option hardware errors

3xx error messages

Error code	Description	Action
321.51	Motor 1 (Pick/Lift) motor no first encoder	Go to **"Option tray pick/lift motor service check" on page 124**.
321.52	Motor 1 (Pick/Lift) motor stop error	
321.53	Motor 1 (Pick/Lift) PWM underflow (motor overspeed)	
322.54	Motor 2 (Separator/Passthru) motor no first encoder	Go to **"Option tray separator/passthrough motor service check" on page 124**.
322.55	Motor 2 (Separator/Passthru) motor stop error	
322.56	Motor 2 (Separator/Passthru) PWM underflow (motor overspeed)	
324.57	Motor 3 motor no first encoder	Go to **"Option tray ACM motor service check" on page 125**.
324.58	Motor 3 motor stop error	
324.59	Motor 3 PWM underflow (motor overspeed)	

Error code	Description	Action
325.60	Hardware error—Board ID unknown	Go to **“Option tray controller card service check” on page 125**.
325.61	Hardware error—Option type unknown	
325.62	Hardware error—Product ID unknown	
325.63	Hardware error—Sensors are not plugged on the board.	
331.51	Motor 1 (Pick/Lift) motor no first encoder	Go to **“Option tray pick/lift motor service check” on page 124**.
331.52	Motor 1 (Pick/Lift) motor stop error	
331.53	Motor 1 (Pick/Lift) PWM underflow (motor overspeed)	
332.54	Motor 2 (Separator/Passthru) Motor no first encoder	Go to **“Option tray separator/passthrough motor service check” on page 124**.
332.55	Motor 2 (Separator/Passthru) motor stop error	
332.56	Motor 2 (Separator/Passthru) PWM underflow (motor overspeed)	
334.57	Motor 3 motor no first encoder	Go to **“Option tray ACM motor service check” on page 125**.
334.58	Motor 3 motor stop error	
334.59	Motor 3 PWM underflow (motor overspeed)	
335.60	Hardware error—Board ID unknown	Go to **“Option tray controller card service check” on page 125**.
335.61	Hardware error—Option type unknown	
335.62	Hardware error—Product ID unknown	
335.63	Hardware error—Sensors are not plugged on the board.	
341.51	Motor 1 (Pick/Lift) motor no first encoder	Go to **“Option tray pick/lift motor service check” on page 124**.
341.52	Motor 1 (Pick/Lift) motor stop error	
341.53	Motor 1 (Pick/Lift) PWM underflow (motor overspeed)	
342.54	Motor 2 (Separator/Passthru) motor no first encoder	Go to **“Option tray separator/passthrough motor service check” on page 124**.
342.55	Motor 2 (Separator/Passthru) motor stop error	
342.56	Motor 2 (Separator/Passthru) PWM underflow (motor overspeed)	
344.57	Motor 3 motor no first encoder	Go to **“Option tray ACM motor service check” on page 125**.
344.58	Motor 3 motor stop error	
344.59	Motor 3 PWM underflow (motor overspeed)	

Option tray pick/lift motor service check

Action	Yes	No
Step 1 **a** Remove the option tray insert. **b** Check the lift plate and gears for proper operation by moving the metal plate. Do the lift plate and gears move freely, and are they free of wear or damage?	Go to step 2.	Replace the tray insert.
Step 2 Check the pick/lift motor for the following: • Gear tooth breakage • Freedom of rotation Is it free of wear or damage?	Go to step 3.	Replace the tray.
Step 3 Check the cable J11 on the option tray controller card. Is it properly connected and free of damage?	Contact the next level of support.	Replace the tray.

Option tray separator/passthrough motor service check

Action	Yes	No
Step 1 **a** Remove the option tray insert. **b** Check the separator roll assembly gear under the tray base for the following: • Gear tooth breakage • Freedom of rotation Does it move freely, and is it free of wear or damage?	Go to step 2.	Replace the tray.
Step 2 Check the cable J10 on the option tray controller card. Is it properly connected and free of damage?	Go to step 3.	Replace the tray.
Step 3 Check the separator roll assembly for wear or damage. Is it free of wear or damage?	Contact the next level of support.	Replace the separator roll assembly. See **“Separator roll assembly removal” on page 332**.

Option tray ACM motor service check

Action	Yes	No
Step 1 Check the cable J11 on the option tray controller card. Is it properly connected?	Go to step 2.	Reseat the cable.
Step 2 **a** Remove the option tray insert and bypass the tray present sensor. **b** POR into the Diagnostics Menu and perform a feed test: **Diagnostics Menu** > **Feed Test** > choose an option tray **c** Check the ACM for proper operation. Does the ACM freely rotate three times before displaying a jam message?	Go to step 3.	Replace the ACM assembly. See **"ACM assembly removal" on page 334**.
Step 3 Is the ACM gear free of wear or damage?	Contact the next level of support.	Replace the ACM assembly. See **"ACM assembly removal" on page 334**.

Option tray controller card service check

Action	Yes	No
Step 1 Check all connections to the option tray controller card. Are the properly connected?	Go to step 2.	Reseat the cables.
Step 2 Check printer's firmware level. Is it up to date?	Go to step 3.	Update the firmware.
Step 3 Replace the option tray. Does the error remain?	Contact the next level of support.	The problem is solved.

ADF/Scanner hardware errors

8xx service error messages

Error code	Description	Action
840.xx	Scanner error	
840.01	The scanner is disabled and can't be used.	Perform the Scanner disabled service check. Go to **"Scanner disabled error service check" on page 127**.
840.02		This message is posted when the MFP PORs. Enter the configuration menu, and reenable the scanner module. See **"Scanner disabled error service check" on page 127**.
840.03		
841.xx	Scanner failure—front side image processing ASIC. Invalid configuration or ASIC not found	Image pipeline ASIC. See **"CCD service check" on page 131**. Also, see **"Flatbed home position service check" on page 132**.
842.xx	Scanner failure—communications	Communication failure. See **"CCD service check" on page 131**.
843.00	Scanner Failure—carriage failed to Home or move to desired position	Go to **"ADF service check" on page 128**.
843.01	ADF mechanical failure	
843.02	Generic Mechanical failure detected	
843.03	Pick Roller Engage Failure	
843.04	Pick Roller Disengage Failure	
843.05	Carriage overun	
843.06	ADF nudger	
843.99	Scanner complete timeout error	
849.xx	Scanner configuration error	

Scanner disabled error service check

Actions	Yes	No
Step 1 POR the machine into **Configuration menu** > **Disable Scanner**. From there, select **Enabled** to change the setting to re-enable the scanner module and then save the setting. POR the MFP to operating mode. Try running a copy from the ADF and flatbed. Did the 840.xx error reoccur?	Go to step 2.	The problem is solved.
Step 2 Re-enter the Configuration mode, and scroll to and select the Disable Scanner menu item. Does the screen display ADF disabled or Auto Disabled?	Go to step 3.	Go to step 8.
Step 3 Check the ADF cable connections on the ADF relay card and connector JADF1 on the controller board. Also inspect the cable connections JHOME1, JFBM1, JPLEN1, and JCIS1 on the controller board. Are the connections properly connected?	Go to step 5.	Go to step 4.
Step 4 Properly connect the connections on the ADF relay card and controller board. POR the machine into **Configuration menu** > **Disable Scanner**. From there, select **Enabled** to change the setting to re-enable the scanner module and then save the setting. POR the MFP to operating mode. Try running a copy from the ADF and flatbed. Did the 840.xx error reoccur?	Go to step 5.	The problem is solved.
Step 5 Check the continuity on the ADF cable. Is there continuity?	Go to step 7.	Go to step 6.
Step 6 Replace the ADF cable. POR the machine into **Configuration menu** > **Disable Scanner**. From there, select **Enabled** to change the setting to re-enable the scanner module and then save the setting. POR the MFP to operating mode. Try running a copy from the ADF and flatbed. Did the 840.xx error reoccur?	Go to step 7.	The problem is solved.

Actions	Yes	No
Step 7 Replace the ADF unit. See **"ADF unit removal" on page 316**. POR the machine into **Configuration menu** > **Disable Scanner**. From there, select **Enabled** to change the setting to re-enable the scanner module and then save the setting. POR the MFP to operating mode. Run a copy from the flatbed. Did the 840.xx error reoccur?	Go to step 8.	The problem is solved.
Step 8 Inspect JFBM1, JHOME1 and JCIS1 on the controller board. Are they properly connected?	Go to step 10.	Go to step 9.
Step 9 Properly connect all the connections. Did the 840.xx error reoccur?	The problem is solved.	Go to step 10.
Step 10 Replace the flatbed unit. See **"Flatbed assembly removal" on page 327**. POR the machine into **Configuration menu** > **Disable Scanner**. From there, select **Enabled** to change the setting to re-enable the scanner module and then save the setting. POR the MFP to operating mode. Run a copy from the flatbed. Did the 840.xx error reoccur?	Go to step 11.	The problem is solved.
Step 11 Replace the controller board. See **"Controller board removal" on page 231**.	The problem is solved.	Contact second-level support.

ADF service check

Action	Yes	No
Step 1 Check all cables connecting the ADF and flatbed to the controller board. Are they properly connected?	Go to step 3.	Go to step 2.
Step 2 Re-connect the cables to the controller board. Did this fix the problem?	The problem is solved.	Go to step 3.

Action	Yes	No
Step 3 Enter diagnostics mode and navigate to: **SCANNER TESTS** >**Sensor Test** Perform the scanner sensor tests. Navigate to: **SCANNER TESTS** > **Motor Tests** Perform the scanner motor tests. Did any test fail?	Go to step 4.	Go to step 8.
Step 4 Did the Flatbed Home Sensor test, or Flatbed motor test fail?	Go step 5.	Go to step 6.
Step 5 Replace the flatbed. See **"Flatbed assembly removal" on page 327**. Did this solve the problem?	The problem is solved.	Go to step 6.
Step 6 Did the ADF pick motor, or feed motor tests fail?	Go to step 7.	Go to step 8.
Step 7 Replace the ADF. See **"ADF unit removal" on page 316**. Did this fix the problem?	The problem is solved.	Go to step 8.
Step 8 Replace the controller board. See **"Controller board removal" on page 231**. Did this fix the problem?	The problem is solved.	Contact the next level of support.

Scan/fax/copy symptoms

Symptom	Action
ADF won't duplex (Duplex ADF only)	See **"ADF duplex service check" on page 137**.
ADF skew	See **"ADF feed errors service check" on page 136**.
Multiple pages feed into ADF	
Documents wont feed into ADF	
Scanner makes buzzing noise on startup or during a scan.	See **"Flatbed home position service check" on page 132**.
Document feeds, but jams in ADF.	See **"ADF paper jam service check" on page 134**.
Black streaks on scans	See **"ADF streak service check" on page 134**.
Blank page	See **"Black or blank page copy service check" on page 130**.
Black page	

Symptom	Action
No dial tone	See **"Modem/fax card service check" on page 138**.
Machine dials a number but fails to make a connection with another fax machine.	The other fax machine may be turned off. Ask the fax recipient to check their machine.
Incoming fax has blank spaces or poor quality.	• The sending fax machine may be faulty. • The sending fax machine may have a dirty document glass. • A noisy phone line can cause errors. • Check the MFP print quality by making a copy. • The print cartridge may be empty.
Invalid fax partition, or fax partition too small.	See **"Format fax storage" on page 177**. Enter **Configuration menu** >**Format Fax Storage**.
Some words on an incoming fax are stretched.	The sending fax machine had a temporary jam.
Faxes fail to transmit.	See **"Fax transmission service check" on page 141**.
Fax reception fails.	See **"Fax reception service check" on page 139**.
Rattling noise coming from the ADF unit.	Inspect the ADF top cover and ADF separator pad for proper installation. Remove the separator pad and separator roll and reinstall them, if needed. See **"ADF separator pad removal " on page 311** and **"ADF separator roll removal " on page 312**. See also**"ADF top cover assembly" on page 322**.

Black or blank page copy service check

Actions	Yes	No
Step 1 Print a menu page, or a page from the host. Is the page black?	See **"Printer is printing solid black pages" on page 40**.	Go to step 2.
Step 2 Is the copy an ADF scan?	Go to step 4.	Go to step 3.
Step 3 Run a flatbed copy. Is it blank or black?	Go to step 5.	Go to step 4.
Step 4 Did the sheet feed into the ADF?	Go to step 5.	Perform an ADF paper feed test.
Step 5 Is the CCD ribbon cable properly connected to JCIS1 on the controller board?	Go to step 6.	Properly connect the ribbon cable to JCIS1.

Actions	Yes	No
Step 6 Replace the flatbed unit. See **"Flatbed assembly removal" on page 327**. Did this fix the problem?	The problem is solved.	Go to step 7.
Step 7 Replace the controller board. See **"Controller board removal" on page 231**. Did this fix the problem?	The problem is solved.	Consult the next level of support.

CCD service check

Actions	Yes	No
Step 1 Restart the device, and retry the scan / copy job. Repeat this step with a few copy jobs. Does the error return?	Go to step 2.	No issue.
Step 2 Is the CCD ribbon cable properly connected to JCIS1 on the controller board?	Go to step 3.	Properly connect cable to JCIS1.
Step 3 Replace the flatbed unit. See **"Flatbed assembly removal" on page 327**. Did this resolve the issue?	The problem is solved.	Replace the controller board. See **"Controller board removal" on page 231**.

Flatbed motor service check

Actions	Yes	No
Step 1 Ensure that the flatbed motor cable (JFB1) is connected. Is the cable connected?	Go to step 2.	Properly connect the cable.
Step 2 Replace the flatbed unit. See **"Flatbed assembly removal" on page 327**. Is voltage present?	The problem is solved.	Go to step 3.
Step 3 Replace the controller board. See **"Controller board removal" on page 231**. Did this solve the problem?	The problem is solved.	Contact the next level of support.

Flatbed home position service check

Actions	Yes	No
Step 1 POR the MFP. Does the CCD move and return to the home position?	The problem is solved.	Go to step 2.
Step 2 Perform the home position sensor test. See **"Scanner tests" on page 169**. Is the sensor working properly?	Go to step 3.	Go to step 5.
Step 3 Check JFBM1 on the controller for proper connection. Is it connected properly?	Go to step 4.	Properly connect the cable.
Step 4 Check pin 1 in JFBM1 for voltage. The voltage is only present when a flatbed copy job is running. The voltage should measure +24V AC. Is voltage present?	Go to step 5.	Replace the controller board. See **"Controller board removal" on page 231**.
Step 5 Ensure that the home position cable (JHOME1) is connected. Is the cable connected?	Go to step 6.	Properly connect the cable.
Step 6 Check pin 1 in JHOME1 for voltage. The voltage should measure +5V DC. Pin 2 should be GND. Is voltage present and is it correct?	Replace the flatbed. See **"Flatbed assembly removal" on page 327**.	Replace the controller board. See **"Controller board removal" on page 231**.

Flatbed legal scan service check

Action	Yes	No
Step 1 Check the JPLEN1 connector on the controller board for proper connection. Is it properly connected?	Go to step 3.	Go to step 2.
Step 2 Re-connect the cable to the controller board. Did this fix the problem?	The problem is solved.	Go to step 3.

Action	Yes	No
Step 3 Enter diagnostics mode and navigate to: **SCANNER TESTS** > **Sensor Test** Select **Paper FB Long** to perform the sensor test. Did it pass?	Go to step 5.	Go to step 4.
Step 4 Replace the flatbed. See **"Flatbed assembly removal" on page 327**. Did this fix the problem?	The problem is solved.	Go to step 5.
Step 5 Replace the controller. See **"Controller board removal" on page 231**. Did this fix the problem?	The problem is solved.	Contact the next level of support.

ADF cover open service check

Actions	Yes	No
Step 1 Is the ADF cover properly closed?	Go to step 3.	Go to step 2.
Step 2 Close the ADF cover. Does the problem go away?	Issue resolved.	Go to step 3.
Step 3 Perform the ADF cover open sensor test. See **"Scanner tests" on page 169**. Does the sensor work properly?	Go to step 4	Go to step 8.
Step 4 On the bottom of the ADF cover, inspect the ADF cover closed sensor actuator. Does it move freely?	Go to step 6.	Go to step 5.
Step 5 Fix the actuator so it moves freely. Does this fix the problem?	Issue resolved.	Go to step 6.

Actions	Yes	No
Step 6 Remove the ADF rear cover and inspect the ADF cover closed sensor for dirt and debris. Is there dirt and debris present?	Go to step 7.	Go to step 8.
Step 7 Clean the dirt and debris from the sensor. Does this fix the issue?	The problem is solved.	Go to step 8.
Step 8 Inspect the connections on the ADF relay card in the ADF. Are all the connections properly connected?	Go to step 9.	Secure all the connections.
Step 9 Check the ADF cable for continuity. Is there continuity?	Go to step 10.	Replace the ADF cable. See **"ADF cable removal" on page 324**.
Step 10 Check for signals or voltages from JADF1 on the controller board. Pin 14 and 16 should measure +24VDC. Pins 15 and 22 should measure +3.3VDC. Are there signals or voltages present?	Replace the ADF. See **"ADF unit removal" on page 316**.	Replace the controller board. See **"Controller board removal" on page 231**.

ADF streak service check

Actions	Yes	No
Do streaks appear on the middle of scans when using the ADF?	Clean the ADF glass on the flatbed using a lint-free cloth. Also, clean the separator roll and pad with a damp cloth.	No issue to fix.

ADF paper jam service check

Note: This service check should be used if the paper feeds and jams in the ADF. If the paper is not feeding into the ADF see **"ADF feed errors service check" on page 136**.

Actions	Yes	No
Step 1 If the ADF is multi-feeding or shingle feeding, then check for dirt on the ADF separator pad, restraint pad, and ADF separator rollers. Are they dirty?	Clean them with a lint free cloth and isopropyl alcohol.	Replace the separator pad and restraint pad.
Step 2 If the paper is skewing when it is fed into the ADF, check the paper guide width. Is it set correctly?	Go to step 3.	Set the paper guides so they contact the edges of the paper.
Step 3 If paper is skewing or jamming when fed or jamming check to see if the top cover is open or ajar. Is the ADF top cover open or ajar?	Properly close the top cover.	If the paper is jamming in the ADF, go to step 6
Step 4 Properly close the top cover. Did this fix the problem?	The problem is solved.	Go to step 5.
Step 5 Is paper failing to feed into the ADF?	Go to step 6.	Go to step 7.
Step 6 Perform the ADF pick motor and ADF feed motor tests. See **"Scanner tests" on page 169**. Are the motors working properly?	Go to step 5	Go to step 11.
Step 7 Perform the ADF paper present and scan sensor tests. See **"Scanner tests" on page 169** Are the sensors working properly?	Go to step 8.	Go to step 10.
Step 8 Perform the ADF interval sensor tests. Are the sensors properly functioning?	Go to step 6.	Go to step 9.
Step 9 Check the leading edge of the paper to ensure the paper is not curled or bent in a way that would keep it from contacting the paper present sensor actuator. Also, check to see if the paper is moist or heavy. Is the paper damaged, or out of spec?	Bad media.	Go to step 7.

Actions	Yes	No
Step 10 Is there dirt in the sensors, or is the paper present actuator stuck?	Clean the sensors, or remove debris from the actuators.	Go to step 8.
Step 11 Are the sensor actuators on the ADF mechanism cover damaged?	Replace the ADF.	Go to step 9.
Step 12 Is the ADF connector properly connected to JADF1 on the system board?	Go to step 10.	Properly connect the cable to the system board.
Step 13 Inspect the connections on the ADF relay card in the ADF. Are all the connections properly connected?	Go to step 11.	Secure all the connections.
Step 14 Check the ADF cable for continuity. Is there continuity?	Go to step 11.	Replace the ADF cable.
Step 15 Check for signals or voltages from JADF1 on the controller board. Pin 14 and 16 should measure +24VDC. Pins 15 and 22 should measure +3.3VDC. Are there signals or voltages present?	Replace the ADF unit. See **"ADF unit removal" on page 316**.	Replace the controller board. See **"Controller board removal" on page 231**.

ADF feed errors service check

Actions	Yes	No
Step 1 If the ADF is multi-feeding, check for dirt on the ADF separator pad and ADF separator rollers. Are they dirty?	Clean them with a lint free cloth and isopropyl alcohol.	Replace the separator pad and restraint pad.
Step 2 If the paper is skewing when it is fed into the ADF, check the paper guide width. Is it set correctly?	Go to step 3.	Set the paper guides so they contact the edges of the paper.
Step 3 If paper is skewing when fed or jamming check to see if the top cover is open or ajar. Is the ADF top cover open or ajar?	Properly close the top cover.	Go to step 4. If the paper is jamming in the ADF, then go to **"ADF paper jam service check" on page 134**.
Step 4 Is the leading edge of the paper wrinkled or torn?	Use different media.	Go to step 5.

Actions	Yes	No
Step 5 Perform the ADF pick motor and ADF feed motor tests. Are the motors working properly?	Go to step 6.	Go to step 8.
Step 6 Perform the ADF paper present sensor test. See **"Scanner tests" on page 169**. Is the sensor working properly?	Go to step 7.	Go to step 8.
Step 7 Check the ADF sensor actuators to see if they are dirty or jammed. Are the actuators ok?	If any actuators on the ADF are broken, then replace the ADF unit. See **"ADF unit removal" on page 316**.	Go to step 8.
Step 8 Properly connect all the connections in the ADF relay card and controller board. Did this fix the situation?	Problem resolved	Go to step 9.
Step 9 Check the ADF cable for continuity. Is there continuity?	Go to step 11.	Go to step 10.
Step 10 Replace the ADF cable. See **"ADF cable removal" on page 324**. Does this fix the problem?	Problem resolved.	Go to step 11.
Step 11 Replace the ADF. See **"ADF unit removal" on page 316**. Does this fix the situation?	Problem solved.	Replace the controller board. See **"Controller board removal" on page 231**.

ADF duplex service check

Note: This service check should be used if the paper feeds and jams in the ADF. If the paper is not feeding into the ADF see **"ADF feed errors service check" on page 136**.

Actions	Yes	No
Step 1 Perform the ADF motor tests to verify that the motors are working properly. See **"Motor tests" on page 169**. Are the motors operating properly?	Go to step 2.	Go to step 4.
Step 2 Perform the scanner sensor tests. See **"Scanner tests" on page 169**. Are the sensors working properly?	Go to step 3.	Go to step 4.
Step 3 Check the ADF sensor actuators to see if they are dirty or jammed. Are the actuators ok?	Go to step 4.	Clean the actuators. If any actuators on the ADF are broken, then replace the ADF unit. See **"ADF unit removal" on page 316**.
Step 4 Check all of the connections on the ADF relay card. Are the properly connected?	Go to step 5.	Properly connect all of the connections.
Step 5 Check the ADF cable to ensure that is it properly connected to the ADF relay card, and the main controller board at JADF1. Is the ADF cable properly connected?	Go to step 6.	Properly connect the ADF cable to its connections.
Step 6 Check the ADF cable for continuity. Make sire pin 22 has continuity. Does pin 22 have continuity?	Go to step 7.	Replace the ADF cable. See **"ADF cable removal" on page 324**.
Step 7 Replace the ADF. See **"ADF unit removal" on page 316**. Does this fix the situation?	Problem solved.	Replace the controller board. See **"Controller board removal" on page 231**.

Modem/fax card service check

Note: This service check should be used if the paper feeds and jams in the ADF. If the paper is not feeding into the ADF see **"ADF feed errors service check" on page 136**.

Actions	Yes	No
Step 1 Is the phone line properly connected to the modem card and the wall jack?	Go to step 2.	Go to step 3.
Step 2 Properly connect the phone line to the modem card and wall jack. Did this fix the problem?	Problem resolved.	Go to step 3.
Step 3 Test the phone line's ability to send and receive calls. Did the phone line work properly?	Go to step 5.	Go to step 4.
Step 4 Use the MFP on a properly functioning phone jack. Did this fix the problem?	Problem resolved.	Go to step 5.
Step 5 Is the modem card ribbon cable properly connected to the system board at JMOD2 and the modem card?	Go to step 7.	Go to step 6.
Step 6 Properly connect the modem card cable to the modem card and system board. Did this fix the problem?	Problem resolved.	Go to step 7.
Step 7 Check the modem card ribbon cable for continuity. Is there continuity?	Go to step 8.	Replace the modem card cable.
Step 8 Check the voltages from connector JMOD2 on the controller board. Check Pin 1, 9, 12 and 13 for +3.3VDC. Pin 10 for +5VDC. Pins 2, 4, 5, 6, 7, and 8 are grounds. Are the signals or voltages present?	Replace the fax card. See **"Modem removal" on page 238**.	Replace the controller board. See **"Controller board removal" on page 231**.

Fax reception service check

Note: Before performing this service check, verify that the correct country code for the MFP is selected. This setting must match the country in which the MFP is used to transmit and receive faxes. If the setting is wrong, the modem settings can be changed in the Fax/SE menu. See step 14. These settings should only be performed with guidance from your second-level support.**"ADF feed errors service check" on page 136**.

Actions	Yes	No
Step 1 Is the phone line properly connected to the modem card and the wall jack?	Go to step 2.	Go to step 3.
Step 2 Properly connect the phone line to the modem card and wall jack. Did this fix the problem?	The problem is solved.	Go to step 3.
Step 3 Test the phone line's ability to send and receive calls. Did the phone line work properly?	Go to step 5.	Go to step 4.
Step 4 Use the MFP on a properly functioning phone jack. Did this fix the problem?	The problem is solved.	Go to step 5.
Step 5 Is the phone line being used by the MFP an analog line?	Go to step 8.	Go to step 6.
Step 6 Is the line being used a VOIP line?	Go to step 7.	Go to step 8.
Step 7 Have the system administrator verify that the VOIP server is configured to receive faxes. Is the server properly configured?	Go to step 8.	Stop here. The issue is VOIP related. The VOIP provider needs to change the server configuration.
Step 8 Is the MFP on a PABX?	Go to step 9.	Go to step 10.
Step 9 Enable **Behind a PABX** under fax settings in the Administration menu. Did this fix the issue?	The problem is solved.	Disable **Behind a PABX,** and go to step10.
Step 10 Is a dial prefix needed to get an outside line?	Go to step 11.	Go to step 12.
Step 11 Try sending a fax using a dial prefix. Did the fax transmit?	The problem is solved.	Go to step 12.
Step 12 Is the fax failing to send to one specific destination?	Go to step 13.	Go to step 14.
Step 13 Check the device that cannot receive a fax. Can it send a fax?	Go to step 14.	Stop here. The issue is with the other device.

Actions	Yes	No
Step 14 Press **411 to enter the Fax/SE Menu. Select “Print Logs”. Print the T30 transmission log. Check the error being reported with the fax error code table. See **“Fax error log codes” on page 143**. Perform the suggested resolution for the error. Did this fix the problem?	The problem is solved.	Go to step 15.
Step 15 Adjust the “Transmit Level” setting in the SE menu. press **411 to enter the SE menu, enter Modem settings, and select “Transmit Level”. Test by adjusting the transmitted signal strength by decreasing/increasing the ‘Transmit Level’ setting in steps of 1db. For example, if default value is -11 db, changing it to-12db will decrease the signal strength by 1db, and changing it to -10db will increase the signal strength by 1db. Recommended adjustment range is ±5 db (in 1db steps) from the default value. Did this fix the problem?	The problem is solved.	Go to your second-level of support. See **“Escalating a fax issue to second-level support” on page 147**.

Fax transmission service check

Actions	Yes	No
Step 1 Is the phone line properly connected to the modem card and the wall jack?	Go to step 2.	Go to step 3.
Step 2 Properly connect the phone line to the modem card and wall jack. Did this fix the problem?	The problem is solved.	Go to step 3.
Step 3 Check for a dial tone. Is there a dial tone?	Go to step 4.	Go to step 6.
Step 4 Use a telephone to test the phone line’s ability to send and receive calls. Did the phone line work properly?	Go to step 7.	Go to step 5.
Step 5 Use a telephone handset to verify the phone line is free of static or external noise. Is the phone line noise-free?	Go to step 7.	Go to step 6.

Actions	Yes	No
Step 6 Use the MFP on a properly functioning phone jack. Did this fix the problem?	The problem is solved.	Go to step 7.
Step 7 In <diags / config menu>, verify that the Enable Fax Receive setting is on. Is the setting set to on?	Go to step 9.	Go to step 8.
Step 8 Set “Enable Fax Receive” to On. Did this fix the problem?	The problem is solved.	Go to step 9.
Step 9 Is Distinctive Ring enabled?	Go to step 11.	Go to step 10.
Step 10 Turn on Distinctive ring. Did this fix the problem?	The problem is solved.	Go to step 11.
Step 11 Is the phone line analog?	Go to step 13.	Go to step 12.
Step 12 IS the VOIP server configured to support fax?	Go to step 13.	Stop here. This is an issue with the VOIP provider.
Step 13 Does the MFP have reception issues with only a certain remote device?	Go to step 14.	Go to step 15.
Step 14 Verify communications with a different remote device. Can the other device receive faxes?	The issue is with the other device.	Go to step 15.
Step 15 Go to the Administrator menu. Enter the Fax settings - Analog Fax Settings submenu. Verify the Block No Name Fax user setting. Is it enabled?	Go to step 16.	Go to step 17.
Step 16 Disable Block No Name Fax user setting. Did this fix the issue?	The problem is solved.	Go to step 17.

Actions	Yes	No
Step 17 Go to the Administrator menu. Enter the Fax settings - Analog Fax Settings submenu. Verify the remote device number is not in the Banned Fax List user setting. Is the remote device number in the banned fax list?	Go to step 18.	Go to step 19.
Step 18 Remove the remote number from the banned fax list. Did this fix the problem?	The problem is solved.	Go to step 19.
Step 19 Adjust the “Receive Threshold” setting in the SE menu. press **411 to enter the SE menu, enter Modem settings, and select “Receive Threshold”. Test by adjusting the received signal level by decreasing/increasing the”Receive Threshold” setting in steps of 2db. For example, if default value is -43 db, changing it to -45db will decrease the received signal level by 2db, and changing it to -41db will increase the received signal level by 2db. Recommended adjustment range is between -33db and -48db (in 2db steps). Did this fix the problem?	The problem is solved.	Go to step 20.
Step 20 Press **411 to enter the SE Menu. Select “Print Logs”. Print the T30 transmission/ job log. Check the error code being reported. See **“Fax error log codes” on page 143**. Did this fix the problem?	The problem is solved.	Contact your second-level of support. See **“Escalating a fax issue to second-level support” on page 147**.

Fax error log codes

Error code	Description	Action
000	No error occurred during fax transmission	No action needed
200	Error occurred when transmitting training.	• Check line quality. • Select a lower ‘Max Speed’ value under Fax Send settings • Adjust the transmit level.
3XX	Error occurred when receiving image data.	• Check line quality. • Adjust ‘Receive Threshold’. • Select a lower ‘Max Speed’ value under Fax Receive settings.

Error code	Description	Action
4XX	Error occurred when sending image data.	• Check line quality. • Adjust 'Transmit Level'. • Select a lower 'Max Speed' value under Fax Receive settings.
5XX	Received unknown response from remote fax device.	No action needed. Issue is with the other device.
6XX	Error occurred when receiving a frame.	• Check line quality. • Adjust 'Receive Threshold'.
7XX	Error occurred when sending a frame.	• Check line quality. • Adjust 'Transmit Level'. • Select a lower 'Max Speed' value under Fax Send settings.
800	Received EOT unexpectedly from the modem in V34 mode.	If error persists, then disable V34 modulation scheme.
802	Too many timeouts occurred during ECM reception.	If error persists, then disable ECM mode.
803	Fax cancelled by user	No action needed.
804	Unexpectedly received a disconnect command from the remote end.	• Check line quality. • Adjust Transmit Level/Receive Threshold values. • Remote device could be requesting an unsupported feature.
805	Remote fax device failed to respond to the DCS command.	• Adjust Transmit Level/Receive Threshold values. • Remote device could be malfunctioning.
808	T1 timeout occurred when trying to establish a connection with a remote fax device.	Adjust Transmit Level/Receive Threshold values.
809	T2 Timeout occurred due to loss of command/response synchronization.	Adjust Transmit Level/Receive Threshold values.
80A	T5 Timeout occurred when transmitting image data to remote fax device.	• Check line quality. • Adjust 'Transmit Level'. • Select a lower 'Max Speed' value under Fax Send settings.
80B	Too many errors when transmitting in ECM mode.	• Check line quality. • Adjust 'Transmit Level'. • Select a lower 'Max Speed' value under Fax Send settings.
80C	Remote device failed to respond to the CTC command.	• Select a lower 'Max Speed' value under Fax Send settings. • Adjust 'Transmit Level'.

Error code	Description	Action
80D	Received too many requests from remote end to repeat the previous command sent.	• Check line quality. • Adjust 'Transmit Level'. • Check if line conditions on remote end will facilitate a good connection.
80E	Functional limitation-Remote fax device does not support G3 receive capability.	No action needed. Issue with the remote device.
811	Failed to detect a fax device at the remote end.	• Verify MFD is answering to fax call and not a voice call. • Decrease value of 'Rings To Answer' setting.
812	No more data rates available in V34 modulation scheme.	Adjust to a lower modulation scheme.
813	Timeout occurred after waiting too long to receive a good frame.	Adjust "Receive Threshold".
814	Tried too many times at selected speed using V34 modulation scheme.	• Adjust 'Transmit Level'. • Adjust to a lower modulation scheme.
815	Fax transmission was interrupted due to power failure.	Troubleshoot MFP if error persists. See **"Modem/fax card service check" on page 138**.
818	Fax transmission failed due to insufficient memory to store scanned image.	Adjust 'Memory Use' setting to allocate more memory for send jobs.
819	Fax transmission failed due to insufficient memory to store received image.	Adjust 'Memory Use' setting to allocate more memory for receive jobs.
81A	A timeout occurred during transmission of a page in ECM mode.	Select a lower 'Max Speed' value under Fax Send settings.
880	Failure to transmit training successfully in V17, V29, V27 terminal modulation schemes.	• Select a lower "Max Speed" under Fax Send settings. • Adjust the "Transmit Level". • Check line quality.
881	Failure to transmit training successfully in V33, V29, V27 terminal modulation schemes.	• Select a lower "Max Speed" under Fax Send settings. • Adjust the "Transmit Level". • Check line quality.
882	Failure to transmit training successfully in V17, V29 terminal modulation schemes.	• Select a lower "Max Speed" under Fax Send settings. • Adjust the "Transmit Level". • Check line quality.
883	Failure to transmit training successfully in V17, V27 terminal modulation schemes.	• Select a lower "Max Speed" under Fax Send settings. • Adjust the "Transmit Level". • Check line quality.

Error code	Description	Action
884	Failure to transmit training successfully in V29, V27 terminal modulation schemes.	• Select a lower “Max Speed” under Fax Send settings. • Adjust the “Transmit Level”. • Check line quality.
885	Failure to transmit training successfully in V17 terminal modulation scheme.	• Select a lower “Max Speed” under Fax Send settings. • Adjust the “Transmit Level”. • Check line quality.
886	Failure to transmit training successfully in V29 terminal modulation scheme.	• Select a lower “Max Speed” under Fax Send settings. • Adjust the “Transmit Level”. • Check line quality.
887	Failure to transmit training successfully in V27 terminal modulation scheme.	• Select a lower “Max Speed” under Fax Send settings. • Adjust the “Transmit Level”. • Check line quality.
888	Failure to transmit training successfully at 2400 bps in V27 terminal modulation scheme.	• Adjust “Transmit Level”. • Check line quality.
889	Failed to connect at the minimum speed supported by the MFP.	• Adjust “Transmit Level”. • Incompatible connection.
88A	Failed to connect using V.34 modulation scheme.	• Check line quality. • Adjust to a lower modulation scheme. • Adjust Transmit Level Receive Threshold values.
901	No fax tones detected from remote end.	• Verify destination phone number. • Verify that the remote fax is authorized to receive faxes.
902	No dial tone detected.	• Check by enabling ‘Behind a PABX’ setting. • Check phone line. • Check MFD modem hardware.
903	Busy tone detected.	Check with remote end if successive attempts fail.
904	Hardware error detected.	See **“Modem/fax card service check” on page 138**.
905	A timeout occurred after dialing the number and waiting for a response.	Check with remote end if successive attempts fail.
906	Fax cancelled by user.	No action needed.

Error code	Description	Action
907	Modem detected a digital line connection.	Verify the MFP is connected to an analog line. See **“Fax transmission service check” on page 141**.
908	Phone line was disconnected	Restore phone line connection.
A00	Received request for unsupported function from remote fax device.	No action needed.
A01	Received request for unsupported image width from remote fax device.	No action needed.
A02	Received request for unsupported image resolution from remote fax device.	No action needed.
A03	Received request for unsupported compression type from remote fax device.	No action needed.
A04	Received request for unsupported image length from remote fax device.	No action needed.
F00	Unknown error occurred.	No action needed.

Escalating a fax issue to second-level support

Before contacting the second-level support, go to the SE menu on the MFP.and generate a Fax error file. This file contains machine settings information and debug information that will help second-level support determine the cause of a failure.

To generate the fax error file, perform the following steps:

1. In a Web browser, type **`http://MFP/<IP address>/se`**.
2. The MFP’s SE menu page will display. Click the “Dump Job History” link. The following displays:

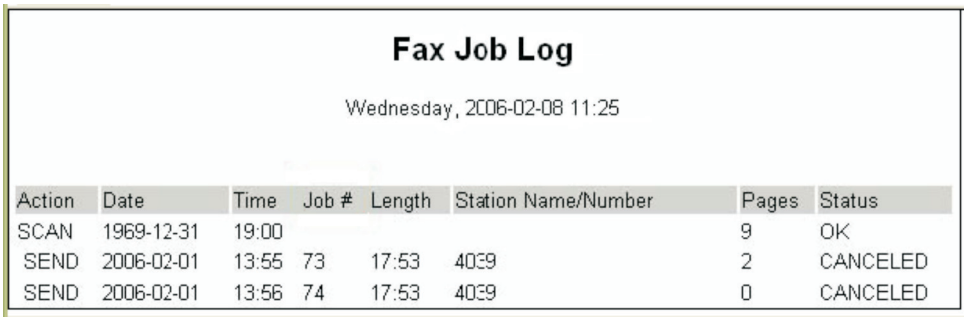

Fax Job Log

Wednesday, 2006-02-08 11:25

Action	Date	Time	Job #	Length	Station Name/Number	Pages	Status
SCAN	1969-12-31	19:00				9	OK
SEND	2006-02-01	13:55	73	17:53	4039	2	CANCELED
SEND	2006-02-01	13:56	74	17:53	4039	0	CANCELED

3. Write down the type of connection, the type of error, and the job in which the error occurred.
4. In the Web browser address bar, type **`http://MFP/<IP address>/se`**.
5. Click **Report a Fax Problem**. The fax check list displays.

6 Fill in the requested information. This is where you will type in the information you retrieved in step 3. Second-level support can assist you if you have questions about the information requested on the page.

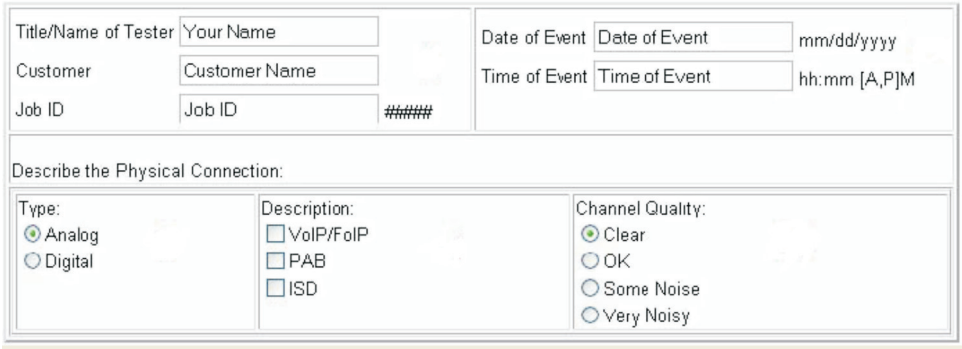

Note: The fields requesting the code levels, model number, type of problem are auto-filled. If the information is not in the fields, it can be retrieved from the SE menu. The SE menu can be accessed by pressing **`**411`** or typing **`http://MFP/<IP address>/se`** in a Web browser.

7 After all the requested information is entered into the Fax Checklist Web page, press the **Submit** button on the bottom of the page. A dialogue asking you to save the file will appear.

Note: The file generated by the MFP is not automatically transmitted to second-level support. It is placed on the computer desktop.

8 Enter a name for the file, and indicated where you want to save the file.

9 Press **OK**. The file appears on the desktop.

10 E-mail the file to second-level support.

Service menus

Understanding the control panel and menus (MX310dn)

Using the printer control panel

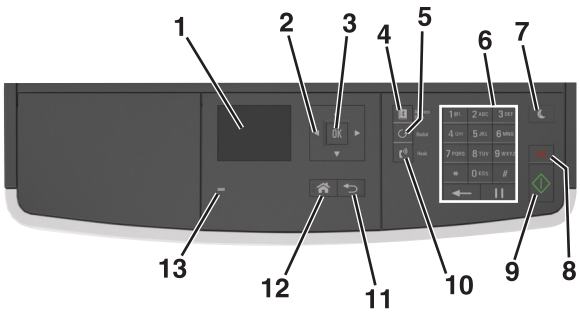

	Use the	To
1	Display	• View the printer status and messages. • Set up and operate the printer.
2	Arrow buttons	Scroll up and down or left and right.
3	Select button	• Select menu options. • Save settings.
4	Address book button	View all the stored addresses.
5	Redial button	View the last number dialed.
6	Keypad	Enter numbers, letters, or symbols.
7	Sleep button	Enable Sleep mode or Hibernate mode. Do the following to wake the printer from Sleep mode: • Press any hard button. • Open a door or cover. • Send a print job from the computer. • Perform a power-on reset using the main power switch.
8	Cancel button	Cancel all printer activity.
9	Start button	Start a job, depending on which mode is selected.
10	Fax button	Send faxes.
11	Back button	Return to the previous screen.
12	Home button	Go to the home screen.
13	Indicator light	Check the status of the printer.

Understanding the colors of the indicator and Sleep button lights

The colors of the indicator and Sleep button lights on the printer control panel signify a certain printer status or condition.

Indicator light color and its corresponding printer status

Indicator light	Printer status
Off	The printer is off or in Hibernate mode.
Blinking green	The printer is warming up, processing data, or printing.
Solid green	The printer is on, but idle.
Blinking red	The printer requires user intervention.

Sleep button light color and its corresponding printer status

Sleep button light	Printer status
Off	The printer is idle or in Ready state.
Solid amber	The printer is in Sleep mode.
Blinking amber	The printer is waking from or entering Hibernate mode.
Blinking amber for 0.1 second, then goes completely off for 1.9 seconds in pulsing pattern	The printer is in Hibernate mode.

Understanding the control panel and menus (MX410, MX510, and MX511)

Using the printer control panel

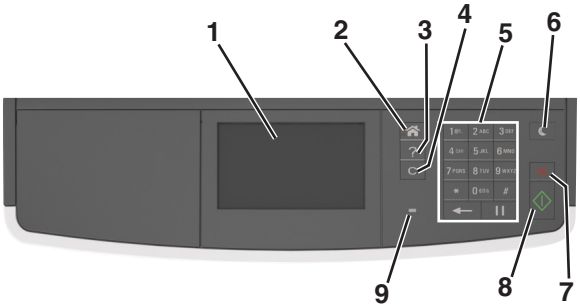

	Use the	To
1	Display	• View the printer status and messages. • Set up and operate the printer.
2	Home button	Go to the home screen.
3	Tips	Open a context-sensitive Help dialog.
4	Clear all / Reset button	Reset the default settings of a function, such as copying, faxing, or scanning.

	Use the	To
5	Keypad	Enter numbers, letters, or symbols.
6	Sleep button	Enable Sleep mode or Hibernate mode. Do one of the following to wake the printer from Sleep mode: • Press any hard button. • Open a door or cover. • Send a print job from the computer. • Perform a power-on reset with the main power switch.
7	Stop or Cancel button	Stop all printer activity.
8	Submit button	Submit changes made in the printer settings.
9	Indicator light	Check the status of the printer.

Understanding the colors of the indicator and Sleep button lights

The colors of the indicator and Sleep button lights on the printer control panel signify a certain printer status or condition.

Indicator light color and its corresponding printer status

Indicator light	Printer status
Off	The printer is off or in Hibernate mode.
Blinking green	The printer is warming up, processing data, or printing.
Solid green	The printer is on, but idle.
Blinking red	The printer requires user intervention.

Sleep button light color and its corresponding printer status

Sleep button light	Printer status
Off	The printer is idle or in Ready state.
Solid amber	The printer is in Sleep mode.
Blinking amber	The printer is waking from or entering Hibernate mode.
Blinking amber for 0.1 second, then goes completely off for 1.9 seconds in pulsing pattern	The printer is in Hibernate mode.

Understanding the home screen

When the printer is turned on, the display shows a basic screen, referred to as the home screen. Use the home screen buttons and icons to initiate an action such as copying, faxing, or scanning; to open the menu screen; or respond to messages.

Note: Your home screen may vary depending on your home screen customization settings, administrative setup, and active embedded solutions.

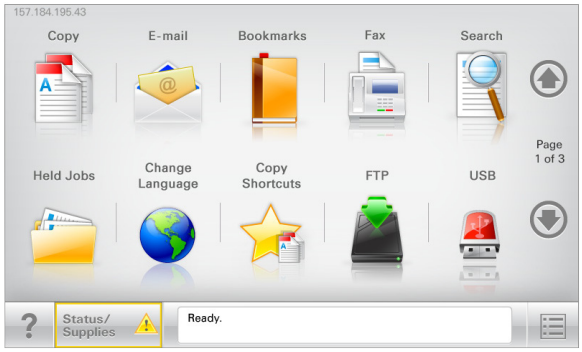

Touch		To
1	Copy	Access the Copy menus and make copies.
2	Fax	Access the Fax menus and send faxes.
3	E-mail	Access the E-mail menus and send e-mails.
4	FTP	Access the File Transfer Protocol (FTP) menus and scan documents directly to an FTP server.
5	Menu icon	Access printer menus. **Note:** The menus are available only when the printer is in ready state.
6	Status message bar	• Show the current printer status such as **`Ready`** or **`Busy`**. • Show printer supply conditions such as **`Imaging unit low`** or **`Cartridge Low`**. • Show intervention messages and the instructions on how to clear them.
7	Status/Supplies	• Show a printer warning or error message whenever the printer requires intervention to continue processing. • View more information on the printer warning or message, and on how to clear it.

This may also appear on the home screen:

Touch	To
Search Held Jobs	Search current held jobs.
Jobs by user	Access print jobs saved by user.
Profiles and Solutions	Access profiles and solutions.

Features

Feature	Description
Attendance message alert 	If an attendance message affects a function, then this icon appears and the red indicator light blinks.
Warning 	If an error condition occurs, then this icon appears.

Feature	Description
Printer IP address Example: `123.123.123.123`	The IP address of your printer is located at the top left corner of the home screen and appears as four sets of numbers separated by periods. You can use the IP address when accessing the Embedded Web Server to view and remotely configure printer settings even when you are not physically near the printer.

Using the touch-screen buttons

Note: Your home screen may vary, depending on your home screen customization settings, administrative setup, and active embedded solutions.

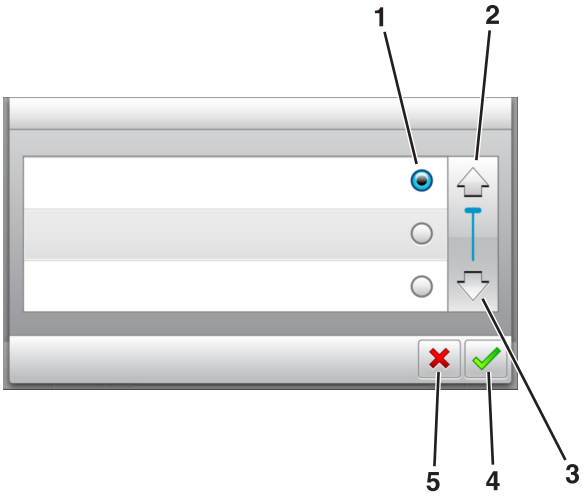

	Touch the	To
1	Radio button	Select or clear an item.
2	Up arrow	Scroll up.
3	Down arrow	Scroll down.
4	Accept button	Save a setting.
5	Cancel button	• Cancel an action or a selection. • Return to the previous screen.

Other touch-screen buttons

Touch	To
	Return to the home screen.
	Open a context-sensitive Help dialog on the printer control panel.
	Scroll to the left.

Touch	To
	Scroll to the right.

Menus list

Paper Menu

Default Source
Paper Size/Type
Configure MP
Substitute Size
Paper Texture
Paper Weight
Paper Loading
Custom Types
Custom Names
Custom Scan Sizes
Universal Setup

Reports

Menu Settings Page
Device Statistics
Network Setup Page[1]
Shortcut List
Fax Job Log
Fax Call Log
Copy Shortcuts
E-mail Shortcuts
Fax Shortcuts
FTP Shortcuts
Profiles List
Print Fonts
Print Directory[4]
Asset Report

Network/Ports

Active NIC
Standard Network[2]
Standard USB[4]
SMTP Setup

Security

Confidential Print
Disk Wiping[4]
Security Audit Log
Set Date and Time

Settings

General Settings
Copy Settings
Fax Settings
E-mail Settings
FTP Settings
Flash Drive Menu[4]
Print Settings

Help

Print All Guides
Copy Guide
E-mail Guide
Fax Guide
FTP Guide
Print Defects Guide
Information Guide
Supplies Guide

Manage Shortcuts

Fax Shortcuts
E-mail Shortcuts
FTP Shortcuts
Copy Shortcuts
Profile Shortcuts

Option Card Menu[3,4]

Note: A list of installed DLEs (Download Emulators) appears.

[1] Depending on the printer setup, this menu item appears as Network Setup Page or Network [x] Setup Page.

[2] Depending on the printer setup, this menu item appears as Standard Network or Network [x].

[3] This menu is supported only in select printer models and appears only when one or more DLEs are installed.

[4] This menu is supported only for MX410, MX510, and MX511.

Diagnostics menu

The Diagnostics menu group contains the settings and operations used while manufacturing and servicing the printer.

Entering the Diagnostics menu

1. Turn off the printer.
2. Press and hold **3** and **6**.
3. Turn on the printer.
4. Release the buttons when the splash screen appears.

Registration

These topic is still under construction. More information is needed.

Scanner calibration

This diagnostic test is used to calibrate both the Black and white values for the ADF and the flatbed. The following values can be adjusted using this menu item:

- Flatbed Black – Values are -10 to 10. The default value is 0.
- ADF Front Black – Values are -10 to 10. The default value is 0.
- ADF Back Black – Values are -10 to 10. The default value is 0.
- Flatbed White – Values are -10 to 10. The default value is 0.
- ADF Front White – Values are -10 to 10. The default value is 0.
- ADF Back White – Values are -10 to 10. The default value is 0.

These should only be used to manually adjust a replacement scanner. To adjust a calibration value, perform the following steps:

1. Navigate to **Diagnostics** > **Scanner Calibration**, and touch **Scanner Calibration**.
2. Select scanner calibration values.
3. Select the value to be adjusted by touching it.
4. Increment up from 0 to darken a value. Decrement the value to lighten it.
5. To view the result for an ADF front adjustment, place a test page image side up and touch **Copy Quick Test**. Compare the results to the original document. Adjust as needed.
6. To view the result for an ADF back adjustment, place a test page image side down and touch **Copy Quick Test**. Compare the results to the original document. Adjust as needed.
7. To view the result for a flatbed adjustment, remove any paper from the ADF, place a test page on the flatbed and touch **Copy Quick Test**. Compare the results to the original. Adjust as needed.

Reset flatbed, ADF front, and ADF back calibration values

These settings revert the selected scan source IQT black and white values back to the Nominal Black and Nominal White settings.

This test should not be performed unless it is on a replacement scanner.

To reset a scanner calibration value, do the following:

1. Navigate to **Diagnostics** > **Scanner Calibration**, and touch **Scanner Calibration**.
2. Select the value to reset (Flatbed, ADF Front, ADF Rear) by touching the selection.

   A screen warning displays.
3. Touch **Yes** to accept. A message indicating the value is being reset displays.

Print Tests

The Print test determines if the printer can print on media from any of the paper input sources. Each of the installed sources is available within the Print tests menu.

The content of the test page varies depending on the media in the selected input source:

- If the selected source contains paper, then a page similar to the Quick test page is printed, but without the print registration diamonds.
- If the selected source contains envelopes, then an envelope print test pattern is printed. This pattern contains only text, which consists of continuous prints of each character in the selected symbol set. If Continuous is selected, then the envelope print test pattern is printed on the first envelope; the rest are blank.

The Print test page always prints single-sided, regardless of the duplex setting or the presence of the duplex option.

To run the Print Test:

1. From the Diagnostics menu, navigate to **Print Tests**.
2. Select the paper source.
3. Select any of the following:
   - Single—Prints a single Print test page (no buttons are active while the test page is printing).
   - Continuous—Continuously prints the Print test pages until  is pressed.

Print Quality Pages

This enables the user to view the values of the printer settings and to test its ability to generate acceptable printed output.

The report consists of four pages. The printer always uses media from Tray 1 to print this report. It will not prompt for a change in media regardless of the media type in Tray 1.

Note: This test cannot be canceled after it has begun. If duplex is activated, then the report is printed in duplex.

To print the Print quality pages:

From the Diagnostics menu, navigate to **Print Tests** > **Print Quality Pages**.

HARDWARE TESTS

If the hardware test fails, replace the failing part.

Panel Test

This test verifies the control panel display function.

To run the Panel test:

1. From the Diagnostics menu, navigate to:

   Hardware Tests > **Panel Test**

2. Press **X** to exit the test.

Button Test

This test verifies the control panel button function except for the Sleep button.

To run the test for the MX410 or MX510:

1. From the Diagnostics menu, navigate to:

   HARDWARE TESTS > **Button Test**

2. The panel displays **`Press`** and an icon matching one of the control panel buttons. Press the physical button that is represented by the icon, and the printer tests the function of that button.

   If the test is successful, then the panel displays another icon to test.

   If a button fails the test, or if a different button is pressed, then the panel displays **`Test Failed`** and returns to the main section of the HARDWARE TESTS menu. After three seconds of inactivity, the panel automatically returns to the main section of the HARDWARE TESTS menu.

   If all buttons pass the test, then the panel displays **`PASSED`** and returns to the main section of the HARDWARE TESTS menu.

3. Press **X** or **Back** to exit the test.

To run the test for the MX511:

1. From the Diagnostics menu, navigate to:

   HARDWARE TESTS > **Button Test**

2. With no buttons pressed, a pattern matching the control panel buttons is displayed. Press each control panel button one at a time, and the panel highlights the represented button in the matching pattern.

3. Release the button, and the highlight disappears.

4. Press **X** or **Back** to exit the test.

DRAM Test

This test checks the validity of DRAM, both standard and optional. The test repeatedly writes patterns of data to the DRAM to verify that each bit in the memory can be set and read correctly.

To run the DRAM test:

1 From the Diagnostics menu, navigate to:

Hardware Tests > **DRAM Test**

2 **`Testing…`** appears, followed by **`Resetting the Printer`**.

3 After the printer resets, the results of the test appear: **`DRAM Test [x] P:###### F:######`**.

- **`[x]`**—Represents the size of the installed DRAM.
- **`P:######`**—Represents the number of times the memory test has passed and finished successfully, with the maximum pass count being 999,999.
- **`F:#####`**—Represents the number of times the memory test has failed and finished with errors, with the maximum fail count being 999,999.

4 After the maximum pass count or fail count is reached, or when all the DRAM has been tested, the test stops and the final results appear.

Serial Wrap Test

Use this test to check the operation of the Serial Port Hardware using a wrap plug. Each signal is tested. If the test fails, replace the controller board.

To run the Serial Wrap Test:

1 Disconnect the serial interface cable, and install the wrap plug.

2 From the Diagnostics menu, navigate to HARDWARE TESTS >Serial Wrap Test.

3 Select the appropriate **Serial Wrap Test** from the list. Values may include **Serial Wrap**, **Serial 1 Wrap**, **Serial 2 Wrap,** or **Serial 3 Wrap**. Each time the test finishes, the screen updates with the result. P and F represent the same numbers for DRAM. If the test passes, the Pass Count increases by 1. However, if the test fails, one of the following failure messages appears for approximately three seconds, and the Fail Count increases by 1:

```
Receive Status Interrupt Error
Status Error
Receive Data Interrupt Error
Transmit Data Interrupt Error
Transmit Empty Error
Threshold Error
Receive Data Ready Error
Break Interrupt Error
Framing Error
Parity Error
Overrun Error
Data Error
Data 232 Error
Data 422 Error
FIFO Error
DSR Error
DSR PIO Error
DSR Interrupt Error
```

```
CTS Error
CTS PIO Error
CTS Interrupt Error
```

After the maximum count is reached or a failure occurs, the test stops.

4 Press **Stop** (X) to cancel the test.

USB HS Test Mode

1 From the Diagnostics menu, navigate to:

Hardware Tests > **USB HS Test Mode**

2 Choose the desired port, and then choose the desired test.

Ports	Tests
Port 0 Port 1 Port 2 Port 3	Test J Test K Test SEO NAK Test Packet Test Force Enable
Single Step Get Device Single Step Set Feature	

3 To exit the test, POR the printer.

4 If the test fails, replace the failing USB cable.

DUPLEX TESTS

Quick Test

The Duplex quick test determines if the top margin at the back of a duplexed page is set correctly. This test prints a duplexed version of the Quick test page that can be used to adjust the duplex top margin. Use either Letter or A4 paper.

To run the Duplex quick test:

1 From the Diagnostics menu, navigate to:

Duplex Tests > **Quick Test**

2 Choose any of the following:

- Single—Prints a single Quick test page.
- Continuous—Continuously prints the Quick test pages until **X** is pressed.

The printer attempts to print the Quick test page from the default paper source. If the default paper source supports only envelopes, then the page is printed from Tray 1.

The Quick test page contains the following information:

- Printer registration settings
- Code levels
- Alignment diamonds at the top, bottom, and each side

- Horizontal lines for skew adjustment
- General printer information, including current page count, installed memory, processor speed, serial number, engine ID, and controller board ID

3 Check the Quick test page for the correct offset between the placement of the first scan line on the front and back side of a duplexed sheet.

4 If adjustment is necessary, the top margin in the Registration menu must be adjusted first. The duplex top margin offset may be adjusted next. A positive offset moves the text down the page and widens the top margin, while a negative offset moves the text up the page and narrows the top margin.

Top Margin

This setting controls the offset between the placement of the first scan line on the front and back side of a duplex sheet.

Note: If adjustment is necessary, the top margin in the Registration menu must be adjusted first. The duplex top margin may be adjusted next.

To adjust this setting:

1 From the Diagnostics menu, navigate to:

Duplex tests > **Top Margin**

2 Change the margin values.

Changing the value by 1 unit moves the margin by 1/100 in. A positive value moves the text down the page and widens the top margin. A negative value moves the text up the page and narrows the top margin.

3 Depending on the printer model, press **OK** or touch to save the desired margin value.

Left Margin

This setting allows the user to shift the position of the left margin of the back side of a duplexed page to the left or right. The default margin is 1/4 in.

To adjust this setting:

1 From the Diagnostics menu, navigate to:

Duplex Tests > **Left Margin**

2 Change the margin value.

Each increment corresponds to 4 pels at 600 dpi (0.00666 in. or 0.1693 mm). A more positive offset moves the margin to the right, and a more negative offset moves the margin to the left.

3 Depending on the printer model, press **OK** or touch to save the desired margin value.

Sensor Test

Use this test to determine if the duplex sensor and switches are working properly.

To run this test:

1. From the Diagnostics menu, navigate to:

   Duplex Tests > **Sensor Test**

2. **`Testing…`** appears while the printer is verifying the state of the sensor.

   The control panel displays the current state of the sensor.

3. Manually actuate the sensor to make it toggle between **`Open`** and **`Closed`**. If the sensor does not toggle, then it is malfunctioning.

4. Press **X** to exit the test.

Duplex Feed 1

This test feeds a blank sheet of paper from Tray 1 to the duplex paper stop position 1. This test can be run using any of the supported paper sizes.

To run this test:

1. From the Diagnostics menu, navigate to:

   Duplex Tests > **Duplex Feed 1**

   The power indicator blinks while the paper is feeding, and **`Duplex Feed 1 Feeding…`** appears. This test cannot be canceled. The panel displays **`Duplex Feed 1 Clear Paper`** when the paper reaches the duplex paper stop position 1.

2. Remove the sheet of paper from the duplex unit, and shut the duplex door.

3. Press **X** to clear the message.

INPUT TRAY TESTS

Feed Tests

This test feeds blank pages through the paper path. It can run using any of the paper or envelope sizes supported by the printer.

To run the Feed test:

1. From the Diagnostics menu, navigate to:

   Input Tray Tests > **Feed Tests**

2. Choose the input source. All installed sources appear.

3. Choose any of the following:
   - **Single**—Feeds a single page.
   - **Continuous**—Continuously feeds pages until **X** is pressed.

Sensor Test

Use this test to determine if the input tray sensors are working correctly.

1 From the Diagnostics menu, navigate to:

Input Tray Tests > **Sensor Test**

2 Select the input source. All installed sources appear.

Not all sensors appear for all trays. The following table indicates which tray sensors are available for each input source:

Input source	Tray empty sensor	Pass through sensor
Standard tray	✓	
Optional 250-/550-sheet tray	✓	✓
Multipurpose feeder	✓	

3 Manually actuate each sensor. The tray empty sensor can be actuated by hand; however, a sheet of paper can be used to cover the pass through sensor.

4 Press **X** to exit the test.

OUTPUT BIN TESTS

Feed Tests

This test verifies that media can be fed to a specific output bin. No information is printed on the media.

To run this test:

1 From the Diagnostics menu, navigate to:

Output Bin Tests > **Feed Tests**

2 Select the output bin into which you want the paper to exit. All installed output bins appear.

3 Select one of the following:

- Single—Feeds a single page.
- Continuous—Continuously feeds pages until **X** is pressed.

Sensor Test

This test verifies that the output bin sensors are working correctly.

To run this test:

1 From the Diagnostics menu, navigate to:

Output Bin Tests > **Sensor Test** > **Standard Bin**

`Testing...` appears while the printer is verifying the state of the sensor.

The control panel displays the current state of the sensor.

2 Manually actuate the sensor to make it toggle between `empty` and `full`. If the sensor does not toggle, then the sensor is malfunctioning.

3 Press **X** to exit the test.

BASE SENSOR TEST

Use the Base Sensor Test to determine that the sensors located inside the printer are operating correctly.

The following sensors can be checked using this test:

- Narrow Media
- Input
- Exit
- Front Door

CAUTION—SHOCK HAZARD: Do not use your hand to toggle these switches. Use a nonconducting item.

To run the Base Sensor Test.

1 From the Diagnostics menu, navigate to **BASE SENSOR TEST**.

2 Choose a sensor.

3 Manually actuate the sensor to verify that it toggles. If the sensor does not toggle, then it is malfunctioning.

Sensor	Values
Input Output Front Door	Open Closed
Narrow Media	Narrow Wide

4 Press **X** to exit the test.

DEVICE TESTS

Quick Disk Test

This test performs a non-destructive read/write test on one block per track on the disk. The test reads one block on each track, saves the data, and then writes and reads four test patterns to the bytes in the block. If the block is good, then the saved data is written back to the disk.

Note: This test is available on the MS610de model only.

To run the quick disk test:

1 From the Diagnostics menu, navigate to:

Device Tests > **Quick Disk Test**.

- The power indicator blinks while the test is in progress.
- `Quick Disk Test/Test Passed` appears if the test passes.
- `Quick Disk Test/Test Failed` appears if the test fails.

2 Press **X** to return to the Device tests menu.

Disk Test/Clean

Warning—Potential Damage: This test destroys all data on the disk and should not be attempted on a good disk. This test may run approximately 1.5 hours, depending on the disk size.

Note: This test is available only for the MX410, MX510, and MX511.

1. From the Diagnostics menu, navigate to:

   DEVICE TESTS > **Disk Test/Clean**

   `Contents will be lost` appears.

2. Do one of the following:

   - Touch ✓ to continue.
   - Press **X** to cancel.

   The test cannot be stopped or canceled after it has begun.

3. After the test is complete, a message appears indicating a pass or fail result.
4. Press **X** to return to the Device tests menu.

Flash Test

This test verifies the condition of the flash device by writing data to it and then reading data from it.

Warning—Potential Damage: This test destroys all data on the flash device.

Note: After this test is executed, reformat the flash using the Flash Format setting in the Utilities menu.

1. From the Diagnostics menu, navigate to:

   Device Tests > **Flash Test**

   `Files will be lost. Go/Stop?` appears.

2. Do one of the following:

   - Depending on the printer model, press **OK** or touch ✓ to continue.
   - Press **X** to cancel.

     Note: When the test starts, it cannot be stopped or canceled.

3. After the test is complete, a message appears indicating a pass or fail result.
4. Press **X** to return to the Device tests menu.
5. Reformat the flash device using the Flash format setting in the Utilities menu.

PRINTER SETUP

Defaults

Warning—Potential Damage: Modification of the printer setting Defaults causes the NVRAM space to be restored to the printer factory settings.

This setting is used by the printer to determine whether US or non-US factory default values should be used. The following printer settings have different US and non-US values:

Printer default values	US value	Non-US value
Paper Sizes setting in the General Settings menu	U.S.	Metric
Default Paper Size (paper feeding sources which do not have hardware size sensing capabilities)	Letter	A4
Default Envelope Size (envelope feeding sources which do not have hardware size sensing capability)	10 Envelope	DL Envelope
Fax media size	Letter	A4
PCL Symbol Set	PC-8	PC-850
PPDS Code Page	437	850
Universal Units of Measure	Inches	Millimeters

To change this setting:

1. From the Diagnostics menu, navigate to:

   Printer Setup > **Defaults**

2. Choose U.S. or Non-U.S.
3. Do one of the following:
   - Depending on the printer model, press **OK** or touch to save any changes.
   - Press **X** to return to the Printer setup menu.

Printed Page Count

The value of this setting gauges the amount of usage on the printer. The value of the Printed Page Count setting will equal the values of the Picked Sides meter. After all print tests have been completed, the value will reset to zero.

Note: The value of the setting cannot be changed manually.

Permanent Page Count

The value of this setting indicates the total amount of pages that have been printed. After all print tests have been completed, the value will reset to zero.

Note: The Permanent Page Count value cannot be reset.

Engine Setting [x]

These settings are used by Engine code ECs to fix field problems. The value of [x] is any value from 1 to 16.

Edge to Edge

When set to On, this shifts all four margins (top, bottom, left, and right) to the physical edge of the page (printable area of a supported paper size). This feature does not work in PPDS emulation.

EP SETUP

EP Defaults

This setting restores each printer setting listed in EP SETUP to its factory default value. Sometimes this is used to help correct print quality problems.

To restore the EP defaults:

1. From the Diagnostics menu, navigate to:

   EP Setup > **EP Defaults**

2. Select **Restore** to restore the default values, or press **X** to exit without changing the settings.

Fuser Temperature (Fuser Temp)

This setting adjusts the fuser temperature to solve problems with paper curl on low-grade paper and/or melting of letterheads on some papers.

To adjust this setting:

1. From the Diagnostics menu, navigate to:

   EP Setup > **Fuser Temp**

2. Press **OK** or touch ✓ to save any changes.

Transfer Adjust

This setting controls the transfer roll algorithm.

To adjust this setting:

1. From the Diagnostics menu, navigate to:

   EP Setup > **Transfer Adjust**

2. Press **OK** or touch ✓ to save any changes.

Print Contrast

This setting controls the developer voltage offset.

To adjust this setting:

1. From the Diagnostics menu, navigate to:

   EP Setup > **Print Contrast**

2. Press **OK** or touch ✓ to save any changes.

Charge Roll

This setting controls the charge roll voltage.

To adjust this setting:

1 From the Diagnostics menu, navigate to:

EP Setup > **Charge Roll**

2 Press **OK** or touch to save any changes.

Gap Adjust

The setting adjusts the minimum gap between sheets. Increasing this value may reduce curl of some printed media and eliminate some output bin stacking problems. However, increasing this value also results in slower overall performance, measured in pages per minute.

The range of values is 0 to 255, and the default value is 0.

To adjust this setting:

1 From the Diagnostics menu, navigate to:

EP Setup > **Gap Adjust**

2 Press **OK** or touch to save any changes.

Auto Dark Adj

When activated, this setting attempts to optimize the amount of toner used when printing with a specific operating point.

Each time this setting executes, the printer performs the following:

- Calibrates its toner density sensor
- Measures the reflectivity of its bare drum
- Prints patches on the drum and measures the reflectivity of the drum through the patches
- Cleans the transfer roll
- Calculates reflectivity ratios and operating points to attain the darkness target of each operating point
- Modifies the EP mechanism as necessary to adjust toner darkness

The cartridge smart chip controls how often this process executes.

Note: No messages are displayed on the control panel to give any indication that this test is running. The device stores the results of its most recent process in the Auto dark adj field on the Menu settings page report.

When deactivated, the printer disables and never executes this process.

To adjust this setting:

1 From the Diagnostics menu, navigate to:

EP Setup > **Auto Dark Adj**

2 Choose **Enable** or **Disable**.

3 Press **OK** to save any changes.

REPORTS

Menu Settings Page

This setting prints the Menu Settings Page. The report prints the Diagnostics Menu settings and their current values.

EVENT LOG

Display Log

This version of the Event log displays the panel text that appeared when the event occurred.

To view the Event log:

1. From the Diagnostics menu, navigate to:

   Event Log > **Display Log**

2. Use the arrow buttons to navigate through the entries.

Print Log

Additional diagnostic information is available when the event log is printed. The first page of the report shows the general device information.

The specific events that appear in the report vary depending on the operational history of the printer. Logs may be printed from the following events:

- Job accounting log failures
- NV reset failures
- NV mirror entries
- 9xx and 1xx (print engine) service error entries
- Programming error entries
- Maintenance count reset entries
- Clear log entries
- Paper jam entries
- Firmware update entries
- JFFS2 partition format entries
- USB setup pkt info entries
- Supply event entries

To print the Event log:

From the Diagnostics menu, navigate to **Event Log** > **Print Log**.

Clear Log

Use this to remove all the current information in the Event log. This affects both the viewed log and the printed log information.

To clear the event log:

1 From the Diagnostics menu, navigate to:

Event Log > **Clear Log**

2 Choose any of the following:

- Yes—To clear the Event log
- No—To exit the Clear log menu

Scanner tests

- **"ASIC test" on page 169**
- **"Motor tests" on page 169**
- **"Feed test" on page 170**
- **"Sensor tests" on page 170**
- **"Scanner calibration reset" on page 173**
- **"ADF magnification" on page 173**

ASIC test

This setting initiates a scan of the scanner ASIC's memory.

To perform this test, do the following:

1 Navigate to **Scanner Tests > ACIS Tests**.

2 Select **ACIS Tests**.

3 The test executes. While this test executes, the screen displays **`ASIC Test Running...`**. If the scanner ASIC passed the test, then the panel posts **`ASIC Test Passed. Rebooting...`**. If the scanner ASIC failed the test, then the panel posts **`ASIC Test Failed. Rebooting...`**.

Motor tests

The motor tests allow you to test the functionality of the motors in the ADF unit.

ADF pick

When **Motor On** is selected, the device runs the pick motor continuously for five seconds and then automatically stops the motor.

To perform this test, do the following:

1 Navigate to **Scanner Tests** >**Motor Tests**.

2 Select **ADF pick**.

The test will run if it is working properly.

Flatbed scanner motor

When **Motor On** is selected, the device moves the flatbed scanner along the entire flatbed scanner path (that is, to the far wall and back to the Home position) and then automatically stops at the Home position.

To perform this test, do the following:

1 Navigate to **Scanner Tests** >**Motor Tests**.

2 Select **Flatbed Scanner Motor**.

The test will run.

ADF feed motor forward

When **Motor On** is selected, the device runs the motor forward continuously until **Motor Off** is selected.

To perform this test, do the following:

1 Navigate to **Scanner Tests** >**Motor Tests**.

2 Select **ADF Feed Motor Forward**.

The test will run.

ADF feed motor backward

When **Motor On** is selected, the device runs the motor forward continuously until **Motor Off** is selected.

To perform this test, do the following:

1 Navigate to **Scanner Tests** >**Motor Tests**.

2 Select **ADF Feed Motor Backward**.

The test will run.

Feed test

This test enables a servicer to execute a continuous feed test from either the ADF or the flatbed. The default is to perform the ADF test if paper is loaded into the ADF. To perform the Feed Test, do the following:

1 Navigate to **Diagnostic Menu** > **Scanner Tests** > **Feed Test**.

2 Press **Select a paper size**.

3 Select your paper size: A4 or Legal.

4 Select the check button on the screen. The screen displays **`Feed Test passed`** or **`Feed Test failed`**.

5 Press **X** on the keypad to exit the test.

Sensor tests

Sensor tests are available to test the sensors on the flatbed and ADF units.

The following sensors can be tested:

- ADF document set – Paper Present
- FB cover open (flatbed top cover)
- Home sensor (carriage home position)
- ADF interval sensor
- ADF stage skew (paper skew) - available on duplex scanners only
- ADF cover open (ADF top cover)

- Scan 1st sensor (paper feed sensor)
- Paper FB long

To test a flatbed or ADF sensor, perform the following steps:

1 Navigate to **Scanner Tests** > **Sensor Tests** > **<sensor to test>**. The following is displayed:

Sensor (ADF document set) 0
FB Cover Open 0
Home Sensor 0
ADF Interval Sensor 0
ADF Stage Skew Sensor 0
ADF Cover Open 0
Scan 1st Sensor 0
Paper FB Long 0

2 Select the sensor to be tested.

3 Actuate the sensor you selected.

The screen will toggle between 0 and 1 if the sensor is properly functioning.

4 Select **Exit** to leave the test.

To test the Paper FB long test, place a sheet of legal paper on the flatbed and close the cover. If the sensor is working properly, the indicator will change from 0 to 1.

To test the Home sensor, perform the following steps:

1 Exit the sensor test.

2 Open the flatbed cover.

3 Use the carriage motor test to move the carriage out of the home position.

4 Close the flatbed cover.

5 Enter the sensor test. If the home sensor is working properly, then a 1 will display instead of a 0.

Actuator locations

A	Stage skew sensor (paper skew)	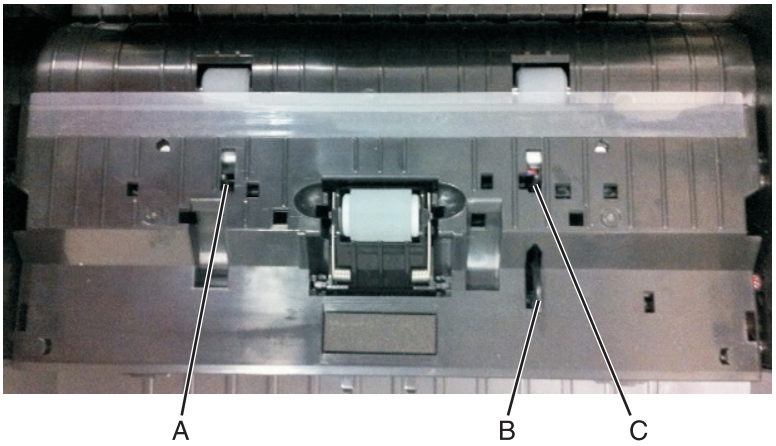
B	Paper present	
C	Interval sensor	

D	ADF cover open	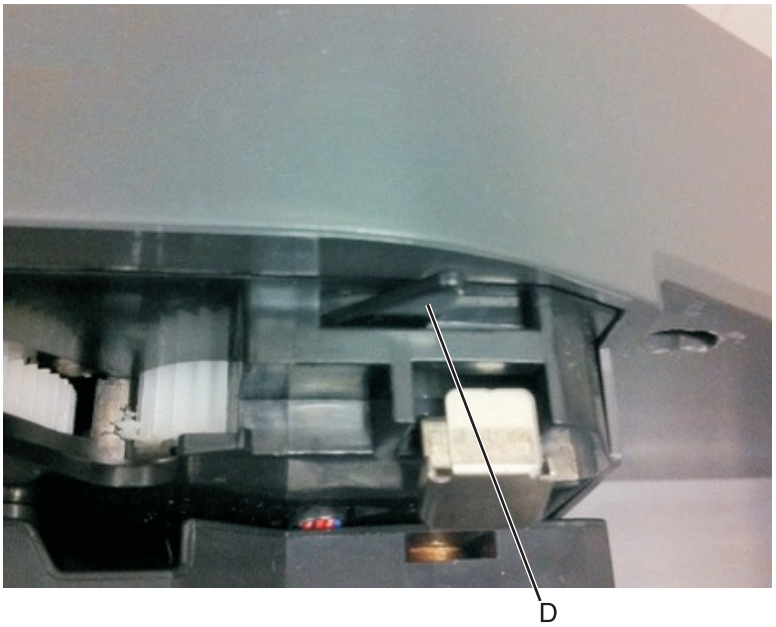
E	Flatbed cover open	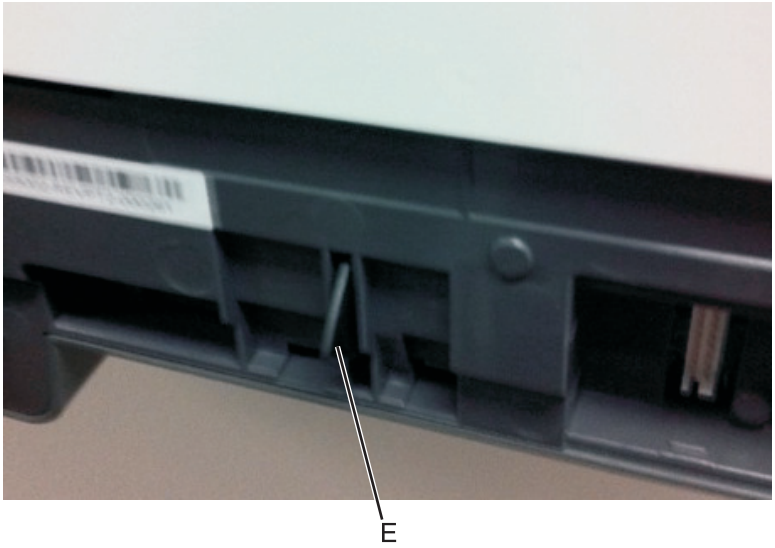
F	Paperfeed sensor	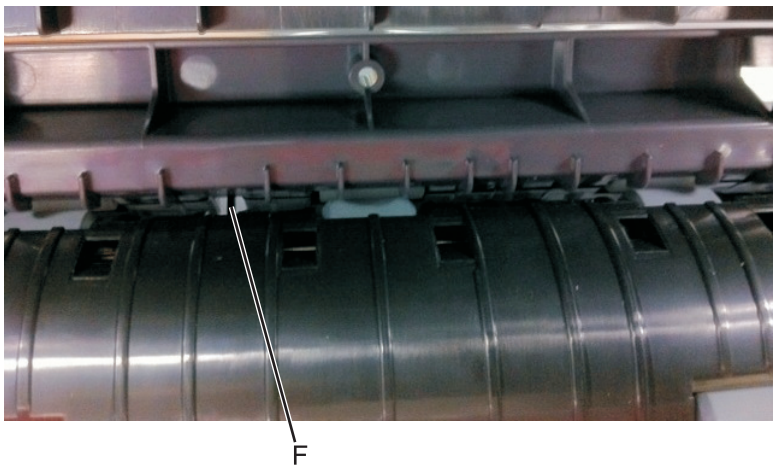

Scanner calibration reset

This is test is run to reset the scanner calibration. This test should only be run after a flatbed or ADF unit has been replaced.

To perform this operation, do the following:

1. Navigate to **Scanner Tests**.
2. Select **Scanner Calibration Reset**. `This procedure should only be run after the scanner or ADF has been replaced` displays.
3. Ensure that the scanner glass and white flatbed cushion on the ADF are clean.
4. Select **Continue**. If the test is successful, then `Operation completed successfully` displays for three seconds, and then returns to the main Scanner Calibration Reset menu. If an error occurs during the test, then `Test Failed, Please Retry`displays, and a Continue button appears that takes you back to the main Scanner Calibration Rest Menu screen.
5. Select **Exit** to leave the test.

After successfully executing this test, verify the results.

1. Load the ADF with a document containing both light and dark content.
2. Perform a duplex copy. If the back side of the resulting copy contains vertical streaks, then the SE should clean the scanner glass and backing sheet, execute the back side scan uniformity procedure, and then perform another copy. If streaks still appear on the resulting copy, then the SE can repeat the cleaning and verification procedure a second time or can replace the ADF entirely.

ADF magnification

This test allows the service technician to adjust the ADF magnification level. To adjust the ADF magnification level, perform the following steps:

1. Navigate to **Diagnostic menu** > **Scanner Tests** > **ADF magnification**.
2. Use the plus or minus buttons to scroll through the magnification values. The values are 1.000, 1.005, 1.007, .980, .985, .990 and .995.
3. Press the check button to accept the value. Press **X** on the screen to exit the test.

Exit Diags

Select this to exit the Diagnostics menu. The printer performs a POR, and restarts in normal mode.

For MX410, MX510, and MX511, this menu appears as a soft button at the bottom right corner of the panel. This is always accessible to the user from the main Diagnostics menu.

Configuration menu

The Configuration menu group consists of menus, settings, and operations that are used to configure a printer for operation.

Entering the Configuration menu

The Configuration Menu group contains a set of menus, settings, and operations which are infrequently required by a user. Generally, the options made available in this menu group are used to configure a printer for operation.

1. Turn off the printer.
2. Press and hold **2** and **6** .
3. Turn on the printer.
4. Release the buttons when the splash screen appears.

Reset ADF Maintenance Kit Counter

After scheduled maintenance, the ADF maintenance count value must be reset to zero.

To reset the maintenance count value to zero:

1. From the Configuration menu, navigate to **Reset ADF Maintenance Kit Counter**.
2. Touch **reset separator roll and pick assembly counter**. `Resetting` displays.
3. Touch **back** to exit.

Maintenance Counter Value

When this is selected, the printer displays the current value for the maintenance kit counter. This counter tracks printer usage. A print job containing a single page increments the counter by one, while a duplex print job increments the counter by two. When the value has reached the rated life of the maintenance kit, it reminds the user that scheduled maintenance is required. See **"Maintenance kits" on page 350**. The counter must be reset after the maintenance kit is installed.

To view the maintenance counter value:

1. From the Configuration menu, navigate to **Maintenance Counter Value**.

   The value is displayed and cannot be changed.
2. Press **Back** or **X** to return to the Configuration menu.

Reset Maintenance Counter

After installing the maintenance kit, the maintenance counter must be reset.

To reset the maintenance counter:

1. From the Configuration menu, navigate to **Reset Maintenance Counter**.
2. Depending on the printer model, press **OK** or touch  to reset the counter, or press **X** to exit without resetting the counter.

Once initiated, the operation cannot be canceled.

Print Quality Pages

This option is a limited version of the Print quality pages setting that appears in the Diagnostics menu. See **"Print Quality Pages" on page 156**. This setting reports the values of a broad range of printer settings and tests the ability of the printer to generate acceptable printed output.

To print the report:

1. From the Configuration menu, navigate to **Print Quality Pages**.
2. Depending on the printer model, press **OK** or touch to print the pages, or press **X** to exit without printing the pages.

   `Printing Quality Test Pages` appears on the display. Once started, the printing cannot be canceled and no buttons are active until the printing completes.

Reports

Menu Settings Page

This report generates a list of the Configuration menu settings and the value of each setting.

To print the Menu settings page from the Configuration menu:

1. From the Configuration menu, navigate to:

   Reports > **Menu Settings Page**
2. Depending on the printer model, press **OK** or touch to print the page, or press **X** to return to the Configuration menu.

Event Log

This generates a printed report of the events detailed in the Print log. See **"Print Log" on page 168**.

To print the Event log from the Configuration menu:

1. From the Configuration menu, navigate to:

   Reports > **Event Log**
2. Press **X** to return to the Configuration menu.

Panel Menus

The Panel Menus lets the system support person enable or disable the operator panel menus. Selecting **On** (the default) allows users to chance values for the printer. **Off** disables the users' access to menus. If a user presses **Menu**, then they receive a message that the panel menus are locked. When set to **Off**, this setting restricts all menu access, even to menus or items set for PIN access, However, when set to **On**, all PIN restrictions are restored.

This menu item appears only when the PJL PASSWORD Environment variable is set to 0.

PPDS Emulation

The value of this option determines if a printer can recognize and use the PPDS data stream.

Available options:

- Deactivate
- Activate

Download Emuls

This appears only if at least one download emulator (DLE) is installed. The default setting is Disable. All download emulators (DLEs) are reenabled automatically after two PORs.

Safe Mode

The settings for this menu item are On and Off (default). When enabled, Safe Mode lets the printer operate in a special limited mode in which it attempts to continue offering as much functionality as possible despite known issues. For more information about Safe Mode and the Safe Mode print behavior for this model, see **"Using Safe Mode" on page 36**.

To change the setting:

1. From the Configuration menu, navigate to **Safe Mode**.
2. Select **On** or **Off** to change the setting.
3. Select **Submit**.
4. POR the printer.

Factory Defaults

Warning—Potential Damage: This operation cannot be undone.

This setting enables a user to restore all of the printer settings to either the network settings (on network models only) or to the base printer settings.

To restore Factory Default settings:

1. From the Configuration Menu, navigate to **Factory Defaults**.
2. Select from the available options:
   - Restore Base—restores all non-critical base printer NVRAM settings.
   - Restore STD Net—restores all network NVRAM settings.
   - Restore LES (available on the touch screen models only)—restores the factory default values for all framework, standard applications and eSF configuration by removing all non-standard applications; and clears the SE logs.

After this setting is changed, the device automatically performs a POR, and restores the appropriate settings to their factory default values.

Energy Conserve

This setting controls which values appear on the Power Saver menu.

To change the setting:

1 From the Configuration menu, navigate to **Energy Conserve**.

2 Select **On** or **Off**.

If On (default), then the Sleep Mode cannot be turned off. If Off, then **`Disabled`** appears on the Sleep Mode menu, and it can be turned off.

Fax low power support

Fax Low Power support allows you to select one of three power settings for the fax. The Auto value relies on the firmware's logic to determine if the device supports the fax portion of the low power architecture. Permit Sleep allows the fax chip to enter low power mode whenever the device determines that it should. Disable Sleep prohibits the fax chip from ever entering low power mode.

To change the fax low power support setting:

1 Select **Fax low-power support** in the configuration menu to open the item

2 Select one of the three settings: disable, sleep permit, or sleep auto.

3 Select to accept the setting, or press the **X** on the screen to exit the item.

Min copy memory

Values will be displayed only if the amount of installed DRAM is at least twice the amount of the value, that is, at least 200 MB of installed DRAM is required to display the 100 MB selection.

To change this setting:

1 Select **Min Copy Memory** from the Configuration Menu. **`[setting's current value]`** displays.

2 Select the desired setting from the following values: 25, 35, 50, 80, 100.

3 Select **Submit** to save the change.

Num pad job assist

This setting determines if a user can configure and initiate a job using the operator panel's hard buttons.

To change this setting:

1 Select **Num Pad Job Assist** from the Configuration Menu. **`[setting's current value]`** displays.

2 Select the minus to decrease the setting's value or the plus to increase the setting's value.

3 Select **Submit** to save the change.

Format fax storage

This setting enables you to format the non-volatile storage used for storing faxes.

To change this setting:

1 Select **Format Fax Storage** from the Configuration Menu.

Note: If an advanced password has been established, then you must enter this password to change the setting. If no advanced password exists, then you can establish one by using the keyboard that appears on the LCD.

2 Select **Submit** to save the change.

3 Select **Back** to cancel and return to the Configuration Menu. `Formatting Fax Flash DO NOT POWER OFF` appears on the display while the format operation is active.

ADF edge erase

This menu item sets the size, in millimeters, of the no-print area around an ADF scan job. All copy jobs have a minimum of a two millimeter border. Copy jobs will use the setting or two millimeters, whichever is larger.

To adjust the ADF edge erase setting, perform the following steps:

1 Select **ADF Edge Erase** from the Configuration Menu. `[setting's current value]` displays.

2 Select minus to decrease the setting's value or plus to increase the setting's value.

3 Select **Submit** to save the change.

4 Select **Back** to cancel and return to the Configuration Menu.

Flatbed edge erase

This menu item sets the size, in millimeters, of the no print area around a flatbed scan job. Copy jobs will use the setting or two millimeters, whichever is larger.

To adjust the flatbed edge erase setting, perform the following steps:

1 Select **FB Edge Erase** from the Configuration Menu. `[setting's current value]` displays.

2 Select minus to decrease the setting's value or plus to increase the setting's value.

3 Select **Submit** to save the change.

4 Select **Back** to cancel and return to the Configuration Menu.

Scanner manual registration

This item is used to manually register the flatbed and ADF on the MFP's scanner unit. Registration should be performed whenever the ADF unit, flatbed unit, or controller card are replaced.

To manually register a Duplex ADF, perform the following steps:

1 In the Configuration Menu, scroll to the Scanner Manual Registration menu item.

2 Select **Scanner Manual Registration**.

3 Select **Print Quick Test Page**.

4 To view and adjust the duplex ADF front side registration, place the quick test page faceup into the ADF.

5 Select **Copy Quick Test**.

6 After the quick test page copies, select **ADF Front**.

7 Use the plus to increase or the minus to decrease the settings value for horizontal adjust and top margin.

Note: Each button press moves the margin values one pixel in the respective direction.

8 Select **Submit** to accept the value.

9 Save changes by placing the print quick test page face up and selecting **Copy Quick Test**.

10 Repeat steps 6, 7,and 8 as needed.

11 To view and adjust the duplex ADF backside registration, place the quick test page face down up into the ADF, and select **Copy Quick Test**.

12 After the quick test page copies, select **ADF Back**.

13 Use the plus or minus to increase or decrease the settings value for horizontal adjust and top margin.

Note: Each button press moves the margin values one pixel in the respective direction.

14 Select **Submit** to accept the value.

15 Verify the changes by placing the print quick test page face down and selecting **Copy Quick Test**.

16 Repeat steps 13, 14,and 15 as needed.

To manually register the flatbed, perform the following steps:

1 In the Configuration Menu, select the Scanner Manual Registration menu item.

2 Select the Print Quick Test Page menu item.

3 To view and adjust the flatbed registration, place the quick test page into the flatbed.

4 Select the Copy Quick Test Page item.

5 After the quick test page copies, select **Flatbed**.

6 Use the plus or minus to increase or decrease the settings value for the left or top margin.

Note: Each button press moves the margin values one pixel in the respective direction.

7 Select **Submit** to accept the value.

8 Place the print quick test page on the flatbed and select **Copy Quick Test**.

9 Repeat steps 5 and 6 as needed.

10 To exit REGISTRATION, select **Back** or **Stop**.

Disable scanner

This menu item is used to disable the MFP scanner if it is malfunctioning. The MFP must be powered off and on for the new settings to take effect.

To change this setting:

1 Select **Disable Scanner** from the Configuration menu.

2 Scroll through the setting's other possible values. The values are Enable, Disable, ADF disable.

3 To save the setting's new value, select **Submit**.

Paper Prompts

This controls which tray a change prompt is directed to when paper is sensed to be the wrong size.

Note: The value of **"Action for Prompts" on page 180** may override the value of this setting.

To change this setting:

1. From the Configuration menu, navigate to **Paper Prompts**.
2. Select from the available options:
   - Auto (default)
   - Multi-purpose Feeder
   - Manual Paper
3. Depending on the printer model, press **OK** or touch to save the setting, or press **X** to return to the Configuration menu without saving any changes.

When it is set to **Auto**, the emulator selected to print the job determines which of the installed input sources will receive the change prompt. When set to a value other than Auto, the selected source always receives this type of prompt.

Envelope Prompts

This controls which tray a change prompt is directed to when the envelopes are sensed to be the wrong size.

Note: The value of **"Action for Prompts" on page 180** may override the value of this setting.

To change this setting:

1. From the Configuration menu, navigate to **Envelope Prompts**.
2. Select from the available options:
   - Auto (default)
   - Multi-purpose Feeder
   - Manual Envelope
3. Depending on the printer model, press **OK** or touch to save the setting, or press **X** to return to the Configuration menu without saving any changes.

When it is set to **Auto**, the emulator selected to print the job determines which of the installed input sources will receive the change prompt. When set to a value other than Auto, the selected source always receives this type of prompt.

Action for Prompts

This setting enables a user to determine which input source would receive paper-related or envelope-related change prompts when they occur. Regardless of the target source, the printer always requires some type of user assistance to resolve the change prompt (examples: pushing a button to ignore the prompt and changing the source's installed media). However, this setting gives a user the option of having the printer resolve change prompt situations without requiring any user assistance.

To change this setting:

1. From the Configuration menu, navigate to **Action for Prompts**.
2. Select from the available options to change the setting.
   - Prompt User (default)
   - Continue
   - Use Current
3. Depending on the printer model, press **OK** or touch to save the setting, or press **X** to return to the Configuration menu without saving any changes.

When set to **Prompt user**, the printer behaves like the past implementation. When a change prompt occurs, the printer stops printing, posts the change prompt to the target source, and waits for the user to select an action before continuing.

When set to **Continue**, the printer automatically assumes that the user selects **Continue** every time a change prompt is encountered. Likewise, when the device is set to **Use Current**, all change prompts will perform as if **Use Current** was selected by the user.

Jobs on Disk

This setting appears only if a hard disk is installed. It allows buffered jobs to be deleted from the disk. This does not affect Print and Hold or parked jobs.

To change the setting:

1. From the Configuration menu, navigate to **Jobs on Disk**.
2. Select from the available options to change the setting:
   - Delete
   - Do Not Delete (default)
3. Press **X** to return to the Configuration menu.

Disk Encryption

Warning—Potential Damage: If the settings are changed, then the printer completely formats the hard disk. All information on the disk will be unrecoverable.

This setting appears only if a hard disk is installed. It controls whether the printer encrypts the information that it writes to the hard disk.

To change the setting:

1. From the Configuration menu, navigate to **Disk Encryption**.
2. Select from the available options to change the setting.
   - Enable—enables encryption of hard disk.
   - Disable (default)—enables formatting of hard disk.
3. **`Contents will be lost. Continue?`** appears. Select **Yes** to proceed with the encryption or formatting of the disk, or **No** to cancel the operation. If Yes is selected, then a progress bar appears on the display that indicates the overall completion of the selected operation. After completion, the display returns to Disk Encryption.

Erase All Information on Disk

Note: This setting is available on the MS610de model only.

This setting performs a wipe of the printer hard disk, erasing all data.

Warning—Potential Damage: This deletes all data on the printer hard disk, including downloaded fonts, macros, and held jobs. Do not initiate a disk wipe if you have information on the printer that you want to save.

Available options:

- Single Pass Erase—overwrites all data and the file system. This wipe is faster but less secure since it is possible to retrieve the deleted data with forensic data-retrieval techniques.
- Multi Pass Erase—overwrites all data without rewriting the file system. This wipe is DoD 5220.22-M compliant since the deleted data is irretrievable.

Note: If the printer is reset while a disk wipe operation is executing, then **`Corrupt Disk`** appears upon regaining power.

Wipe All Settings

This makes any sensitive information that may exist on the volatile or non-volatile storage of the device completely indecipherable. When selected, the printer performs a non-critical NVRAM reset and then reboots.

Font Density

This creates microscopic holes in all black text. The holes save toner by reducing overlapping toner.

Available options: 1 to 5

Font Sharpening

This allows a user to set a text point-size value below which the high-frequency screens will be used when printing font data.

Available options:

- Off
- On

Reduced Curl

When on, this setting significantly reduces throughput and should be activated only as a last resort to solve paper curl problems. The printer uses this mode only when the media type is set to Paper.

Available options:

- Off
- On

Require Standby

This sets Standby Mode to On or Off. The default is On.

To change the setting:

1. From the Configuration menu, navigate to **Require Standby**.
2. Select **On** or **Off** to change the setting.
3. Depending on the printer model, press **OK** or touch to save the setting, or press **X** to return to the Configuration menu without saving any changes.

If Standby mode is On, the printer begins functioning in Standby mode when it remains idle for an amount of time.

The Standby mode enables the printer:

- To consume less energy than when operating in normal mode but not as little as when operating in Power saver.
- To return to the Ready state more quickly than when operating in power saver. If set to Off, this setting disables Standby mode in the General settings menu.

A5 Loading

This determines the orientation used when printing on A5 paper.

Available options:

- Long Edge—The printer will print A5-size paper in the long-edge feed orientation from all trays.
- Short Edge—The printer will print A5-size paper in the short-edge feed orientation from all trays.

UI Automation

Once enabled, this setting creates an **ENABLE_UI_AUTOMATION** file in the /var/fs/shared/ directory. As long as this file exists, the printer permits external developers to test the stability of their applications against the printer to make sure that their applications have an appropriate level of stability. Disabling this setting deletes the file and prohibits automated testing.

To change the setting:

1. From the Configuration menu, navigate to **UI Automation**.
2. Select from the available options to change the setting.
   - Enable
   - Disable (default)
3. Depending on the printer model, press **OK** or touch to save the setting, or press **X** to return to the Configuration menu without saving any changes.

LES Applications

Note: This setting is for touchscreen models only.

This menu setting is used to enable or disable Lexmark Embedded Solutions (LES) applications.

To change the settings, perform the following steps:

1. From the Configuration menu, navigate to **LES applications**.
2. Press the left or right arrow to navigate, then select **Enable** or **Disable**.

3 Touch **Submit**.

Press **Back** to return to the Configuration menu.

Key Repeat Initial Delay

Note: This setting is available on the MS610de model only.

This setting determines the length of delay before a repeating key starts repeating. The range is 0.25–5 seconds, with increments of 0.25. The default setting is one second.

To adjust this setting:

1 From the Configuration menu, navigate to **Key Repeat Initial Delay**.

2 Touch the arrow keys to adjust the setting.

3 Touch to save the setting, or press **X** to return to the Configuration menu without saving any changes.

Key Repeat Rate

Note: This setting is available for touch screen models only.

This setting indicates the number of presses per second for repeating keys. The range is 0.5–30, with increments of 1.

To adjust this setting:

1 From the Configuration Menu, navigate to **Key Repeat Rate**.

2 Touch the arrow keys to adjust the setting.

3 Touch to save the setting, or press **X** to return to the Configuration Menu without saving any changes.

Clear Supply Usage History

This setting reverts the supply usage history (number of pages and days remaining) to the factory shipped level.

To clear the supply usage history:

1 From the Configuration menu, navigate to **Clear Supply Usage History**.

2 Depending on the printer model, press **OK** or touch **Clear Supply Usage History** to proceed.

Clear Custom Status

Executing this operation erases any strings that have been defined by the user for the default or alternate custom messages.

To clear the custom status:

1 From the Configuration menu, navigate to **Clear Custom Status**.

2 Depending on the printer model, press **OK** or touch **Clear Custom Status** to proceed.

USB Speed

This setting is used to set the throughput of the USB port on the printer.

Available options:

- Auto
- Full—Forces the USB port to run at full speed and also disables its high-speed capabilities.

Automatically Display Error Screens

If On, the panel automatically displays any existing printer-related IR after the printer remains inactive on the home screen for a length of time equal to the Screen timeout setting in the Timeouts section of the General settings menu. Any IR that appears on the display will give the user the option of returning to the home screen without clearing it. From the home screen, any other workflow or feature can be initiated as usual. Once the printer returns to the home screen, any existing IR will again appear after the printer remains inactive for a length of time equal to the Screen timeout setting.

To change this setting:

1. From the Configuration menu, navigate to **Automatically Display Error Screens**.
2. Select from the available options:
   - On (default)
   - Off
3. Depending on the printer model, press **OK** or touch to save the setting, or press **X** to return to the Configuration menu without saving any changes.

USB PnP

In some cases, the USB port at the back of the printer may be incompatible with the chipset in a user's PC. This setting lets the user change the USB driver mode to improve its compatibility with these PCs.

Available options:

- 1
- 2

Entering invalid engine mode

This mode is used if the machine has invalid code and needs the correct code loaded. After entering this mode, the firmware code can be updated.

1. Turn off the printer.
2. Press and hold the **3**, **4**, and **6** buttons simultaneously.
3. Turn on the printer.
4. Release the buttons after 10 seconds.

Entering recovery mode

This mode will allow the printer to boot from a secondary set of instructions to allow a code flash to the printer. Code can be flashed from a PC via USB.

1. Turn off the printer.
2. Press and hold the **7**, **2**, and **8** buttons simultaneously.
3. Turn on the printer.
4. Release the buttons after 10 seconds.

Accessing the Network SE menu

This menu contains settings for fine tuning the communication settings for the network interfaces and protocols.

1. Navigate to:

   Networks/Ports > **Standard Network** > **Std Network Setup**.
2. Press and hold **6**, **7**, and **9** simultaneously.

Service Engineer menu

Accessing the service engineer (SE) menu

From a Web browser on a host PC, add **/se** to the printer IP address.

Service engineer (SE) menu

This menu should be used as directed by the next level of support.

Top level menu	Intermediate menu
Print SE Menus	
General	Copyright — Displays copyright information
Code Revision Info	• Network code level — Displays network code level • Network Compile Info — Displays network compile information • Printer Code Level — Displays printer code information • Printer Compile Info — Displays compile information
History	• Print History • Mark History • History Mode
MAC	• Set Card Speed • LAA • Keep Alive

Top level menu	Intermediate menu
NVRAM	• Dump NVRAM • Reinit NVRAM
TCP/IP	• netstat-r • arp-a • Allow SNMP Set • MTU • Meditech Mode • RAW LPR Mode • Gather Debug • Enable Debug

Fax service engineer (SE) menu

The Fax SE menu is used for the Fax transmission service check and the Fax reception service check. It should only be used as directed by the next level of support.

In Ready mode, type ****411** to enter the Fax SE menu.

Repair information

Removal precautions

CAUTION—SHOCK HAZARD: For personal safety and to prevent damage to the printer, remove the power cord from the electrical outlet before you connect or disconnect any cable, electronic board, or assembly. Disconnect any connections between the printer and the PCs/peripherals.

Data security notice

This printer contains various types of memory that are capable of storing device and network settings, information from embedded solutions, and user data. The types of memory, along with the types of data stored by each, are described below.

- Volatile memory—This device utilizes standard Random Access Memory (RAM) to temporarily buffer user data during simple print and copy jobs.
- Non-volatile memory—This device may utilize two forms of non-volatile memory: EEPROM and NAND (flash memory). Both types are used to store the operating system, device settings, network information, scanner and bookmark settings, and embedded solutions.
- Hard disk memory—Some devices have a hard disk drive installed. The printer hard disk is designed for device-specific functionality and cannot be used for long term storage for data that is not print-related. The hard disk does not provide the capability for users to extract information, create folders, create disk or network file shares, or transfer FTP information directly from a client device. The hard disk can retain buffered user data from complex print jobs, as well as form data and font data.

To erase volatile memory, turn off the printer.

To erase non-volatile memory, see the menu item under "Configuration menu" on page 174 pertaining to this.

To erase the printer hard disk, see the menu item under "Configuration menu" on page 174 pertaining to this.

The following parts are capable of storing memory:

- printer control panel
- UICC (User Interface Controller Card)

- controller board
- optional hard drives

Note: The printer control panel and controller board contain NVRAM.

After removing the old part, it must be returned to your next level of support.

Handling ESD-sensitive parts

Many electronic products use parts that are known to be sensitive to electrostatic discharge (ESD). To prevent damage to ESD-sensitive parts, use the following instructions in addition to all the usual precautions, such as turning off power before removing logic boards:

- Keep the ESD-sensitive part in its original shipping container (a special “ESD bag”) until you are ready to install the part into the machine.
- Make the least-possible movements with your body to prevent an increase of static electricity from clothing fibers, carpets, and furniture.
- Put the ESD wrist strap on your wrist. Connect the wrist band to the system ground point. This discharges any static electricity in your body to the machine.
- Hold the ESD-sensitive part by its edge connector shroud (cover); do not touch its pins. If you are removing a pluggable module, use the correct tool.
- Do not place the ESD-sensitive part on the machine cover or on a metal table; if you need to put down the ESD-sensitive part for any reason, first put it into its special bag.
- Machine covers and metal tables are electrical grounds. They increase the risk of damage, because they make a discharge path from your body through the ESD-sensitive part. (Large metal objects can be discharge paths without being grounded.)
- Prevent ESD-sensitive parts from being accidentally touched by other personnel. Install machine covers when you are not working on the machine, and do not put unprotected ESD-sensitive parts on a table.
- If possible, keep all ESD-sensitive parts in a grounded metal cabinet (case).
- Be extra careful while working with ESD-sensitive parts when cold-weather heating is used, because low humidity increases static electricity.

Controller board/control panel replacement

This procedure should be followed only if both the controller board and the operator panel fail. If you need to replace only one of the FRUs, follow the startup procedure described in the FRU’s removal procedure.

CAUTION—POTENTIAL INJURY

The lithium battery in this product is not intended to be replaced. There is a danger of explosion if a lithium battery is incorrectly replaced. Do not recharge, disassemble, or incinerate a lithium battery. Discard used lithium batteries according to the manufacturer's instructions and local regulations.

Warning—Potential Damage: If the operator panel and the controller board are being replaced at the same time, replace the parts in this order to avoid damage to the machine.

1. Replace the controller board first.

   Note: Do not replace the new operator panel and controller board in the machine at the same time.

2. After installing the new controller board, and before installing the new operator panel, start the printer into diagnostics mode.

3 After the printer has completed startup, turn off the printer and replace the operator panel.

Note: If the operator panel display has failed, the printers' startup cycle is complete when the driver motor and fans shut down, and the machine is quiet.

4 After installing the new operator panel, start the printer into diagnostics mode, and allow the printer to go through a complete startup cycle and the display to go to Ready.

5 If the problems persist, leave the new operator panel in the machine, place the old controller board back in the machine, and start it up. After the machine startup, shut down the machine, and install the new controller board. After installing the new controller board, restart the machine, and let it go through the startup cycle.

After this procedure is completed successfully, there is no need to adjust any settings.

If the above procedure fails, you must contact the technical support center for further instructions.

eSF solutions backup

If a technician needs to replace the RIP board, the steps below should be taken to backup the eSF solutions and settings:

1 POR the printer into invalid engine code mode.

2 Open a Web browser, and navigate to the printer Web page.

3 Navigate to **Settings**, and click the link.

4 Navigate to **Solutions**, and click the link.

5 Navigate to **Embedded Solutions**, and click the link.

6 On the Embedded Solutions page, select the apps to be exported by clicking the selection box next to the app.

7 Choose **Export**.

If the Web page cannot be accessed, or an error persists despite trying to boot in Invalid Engine code mode, then there is no way to back up the eSF apps. The technician needs to make the customer aware that the applications and their settings could not be saved.

There is a size limit on the export file - 128kb. Because of this, it is recommended that you don't use the "global" backup found in **Settings** > **Import/Export** > **Export Shortcuts File**, **Export Settings File**, **Export Embedded Solutions Settings File** and **Export Security Setups File**. Customers with a large number of applications or settings may exceed the file size limit and have information truncated in the exported file.

Ribbon cable connectors

Zero Insertion Force (ZIF) connectors

Zero Insertion Force (ZIF) connectors are used on the boards and cards used in this printer. Before inserting or removing a cable from these connectors, read this entire section. Great care must be taken to avoid damaging the connector or cable when inserting or removing the cable.

Warning—Potential Damage: Do not insert the cable so that the contacts are facing the locking actuator. The contacts always face away from the actuator.

Warning—Potential Damage: Do not insert the cable diagonally into the ZIF socket. This can cause damage to the contacts on the cable.

Warning—Potential Damage: Avoid using a fingernail, or sharp object to open the locking mechanism. This could damage the cable.

Warning—Potential Damage: Avoid pressing against the cable when opening the locking mechanism. This can also damage the cable.

These are the types of ZIF connectors used in this printer:

- Horizontal top contact connector
- Horizontal bottom contact connector
- Vertical mount contact connector
- Horizontal sliding connector

Horizontal top contact connector

This FRU contains a horizontal top contact cable connector. Read the instructions before proceeding.

The horizontal top contact connector uses a back flip locking actuator to lock the ribbon cable into the Zero Insertion Force (ZIF) connector. The cable is inserted horizontally into the connector.

Warning—Potential Damage: When opening or closing this type of actuator, gently lift or close the two tabs located on each end of the actuator. The two tabs should be moved simultaneously. Do not close the actuator from the center of the actuator.

Removing a cable from the horizontal top contact connector

1 Place a finger at each end of the locking actuator, and then gently lift the actuator to the unlocked position.

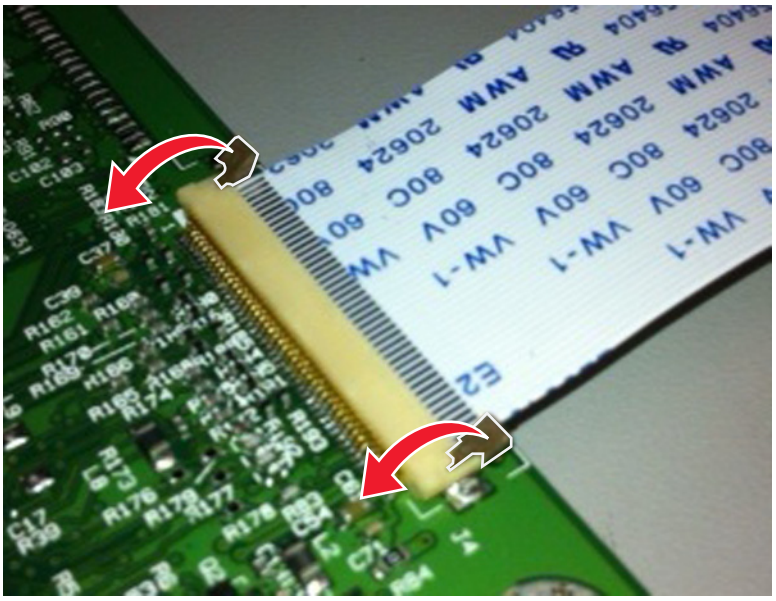

2 Slide the cable out of the connector.

Inserting a cable into the horizontal top contact connector

1 When installing the cable, check the locking actuator to ensure it is in the unlocked position. The tabs on the ends of the actuator are vertical when the actuator is unlocked.

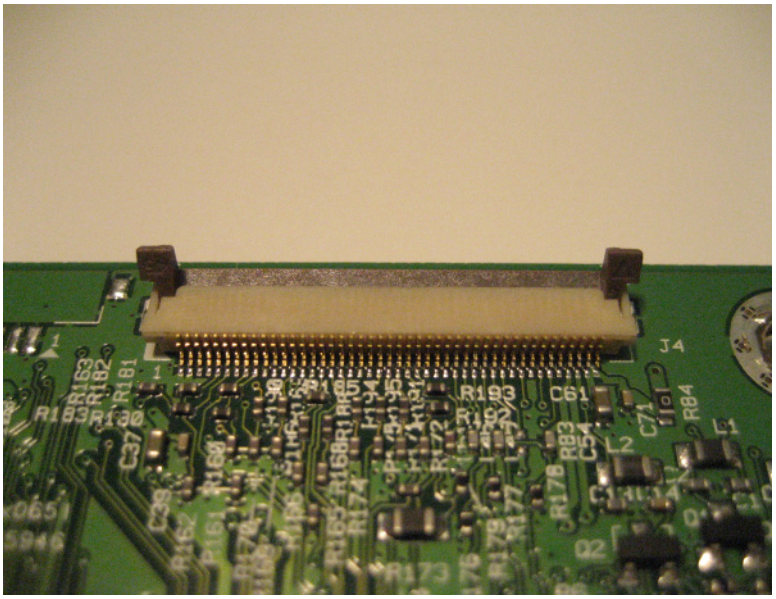

2 Insert the cable with the contacts on the cable facing up. Insert the cable on top of the actuator.

Note: Verify that the cable is installed squarely into the connector. If the cable is not squarely installed, then intermittent failures could occur.

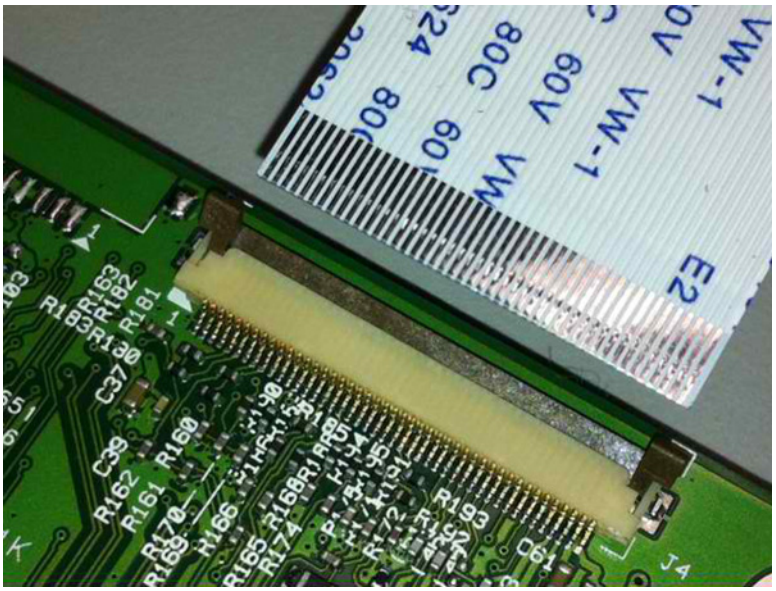

3 Rotate the locking actuator to the locked position. The cable should not move while this step is performed. If the cable moves, open the actuator, reposition the cable, and then close the actuator to the down position.

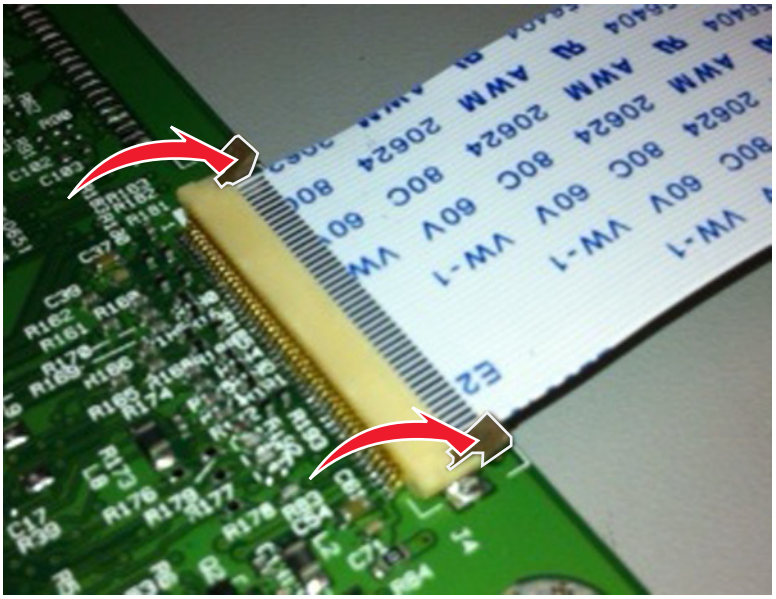

Horizontal bottom contact connector

This FRU contains a horizontal bottom contact cable connector. Read the instructions before proceeding.

The horizontal bottom contact connector uses a flip locking actuator to lock the ribbon cable into the Zero Insertion Force (ZIF) connector. The cable is inserted horizontally into the connector.

Warning—Potential Damage: When opening or closing this type of actuator, gently lift the center of the actuator using your finger. Do not use a fingernail or screwdriver to open the actuator. This could damage the ribbon cable. Do not close the actuator from the ends of the actuator.

Removing a cable from the horizontal bottom contact connector

1 Place two fingers towards each end of the locking actuator, and then gently lift the actuator to the unlocked position.

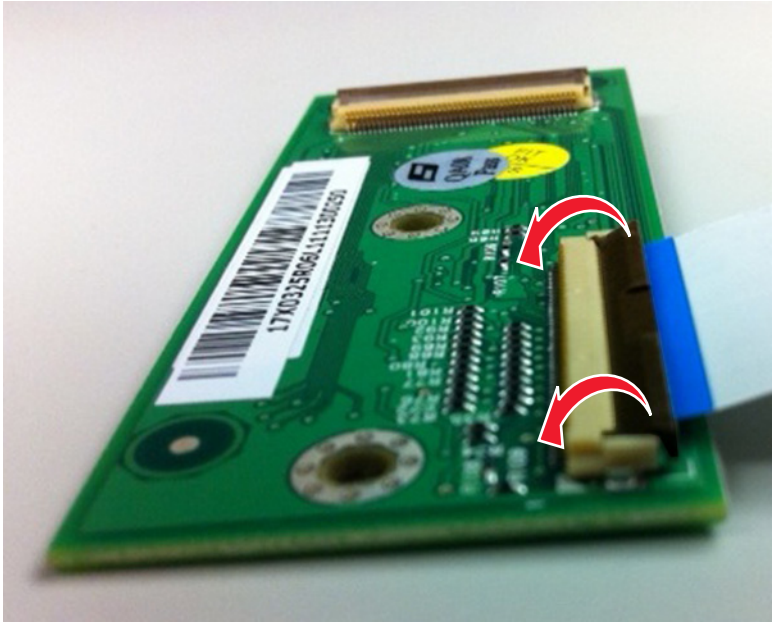

2 Slide the cable out of the connector.

Inserting a cable into the horizontal bottom contact connector

1 Check the actuator to verify it is in the open position.

2 Insert the cable into the ZIF connector with the contacts facing downward and away from the locking actuator. The cable needs to be inserted below the actuator.

Note: Verify that the cable is installed squarely into the connector. If the cable is not squarely installed, then intermittent failures could occur.

3 Place your finger in the middle of the actuator, and then rotate the locking actuator to the locked position.

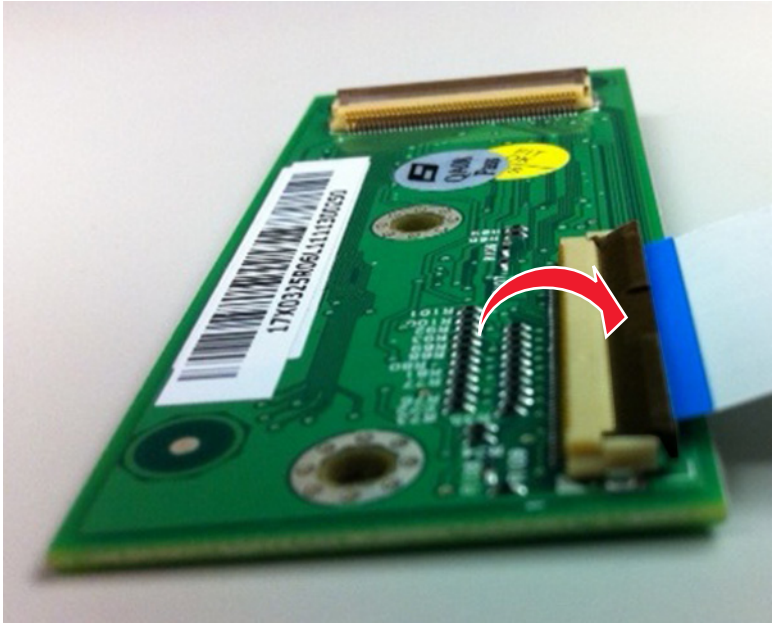

Vertical mount contact connector

This FRU contains a vertical mount contact connector. Read the instructions before proceeding.

The vertical mount contact connector uses a back flip locking actuator to lock the ribbon cable into the Zero Insertion Force (ZIF) connector. The cable is inserted vertically into the connector.

Warning—Potential Damage: When opening or closing this type of actuator, gently lift the center of the actuator using your finger. Do not use a fingernail or screwdriver to open the actuator. This could damage the ribbon cable. Do not close the actuator from the ends of the actuator.

Removing a cable from the vertical mount contact connector

1 Gently rotate the locking actuator from the center of the actuator to the unlocked position.

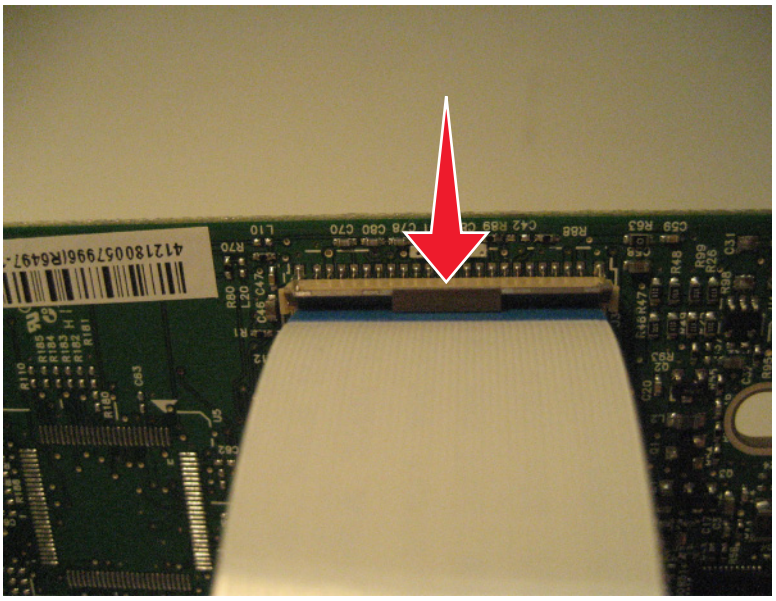

2 Slide the cable out of the connector.

Inserting a cable into the vertical mount contact connector

1 When installing the cable, check the locking actuator to verify it is in the open position.

2 Insert the cable with the contacts on the cable away from the locking actuator. Insert the cable on top of the actuator.

Note: Verify that the cable is installed squarely into the connector. If the cable is not squarely installed, then intermittent failures could occur.

3 Rotate the locking actuator to the locked position by pressing down on both ends of the actuator. The cable should not move when this step is performed. If the cable moves, open the actuator, reposition the cable, and then close the actuator to the down position.

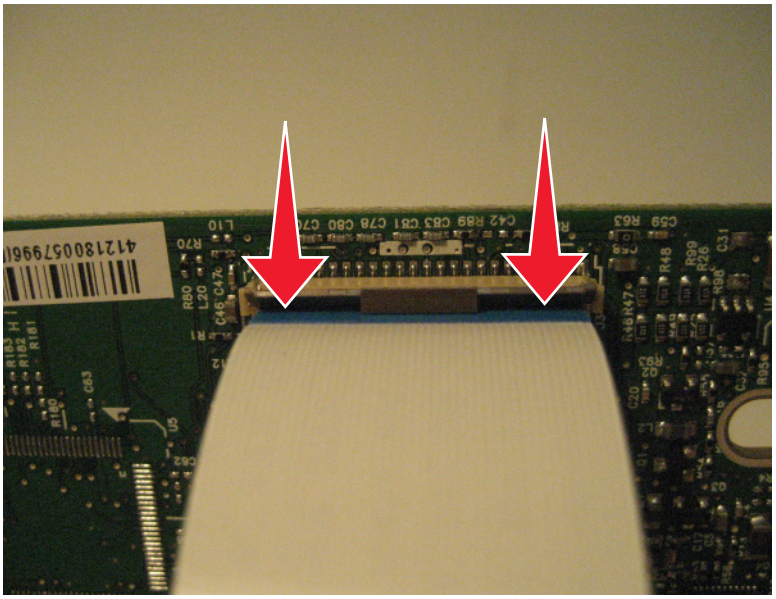

Horizontal sliding contact connector

This FRU contains a horizontal sliding contact connector. Read the instructions before proceeding.

The horizontal sliding contact connector uses a slide locking actuator to lock the ribbon cable into the Zero Insertion Force (ZIF) connector. The cable is inserted horizontally into the connector.

Warning—Potential Damage: When opening or closing this type of actuator, gently push or pull the two tabs located on each end of the actuator. Do not close the actuator from the center of the actuator. Do not use a screwdriver to open or close the actuator. Damage to the cable or connector could occur.

Removing a cable from the horizontal sliding contact connector

1 Simultaneously slide the two tabs located on the ends of the locking actuator away from the connector.

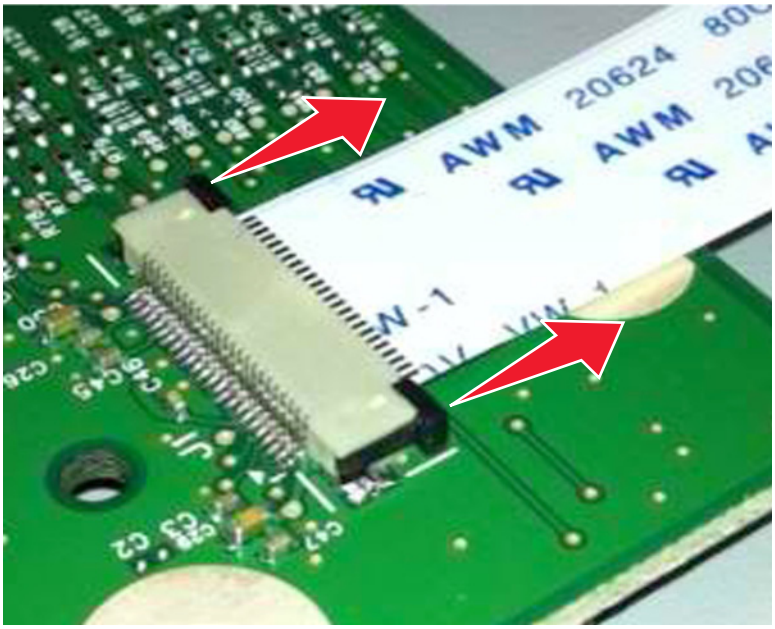

2 Slide the cable out of the connector.

Inserting a cable into the horizontal sliding contact connector

1 When installing the cable, check the locking actuator to verify it is in the open position. If you are opening the connector, pull back on both end tabs using equal force to avoid breaking the connector.

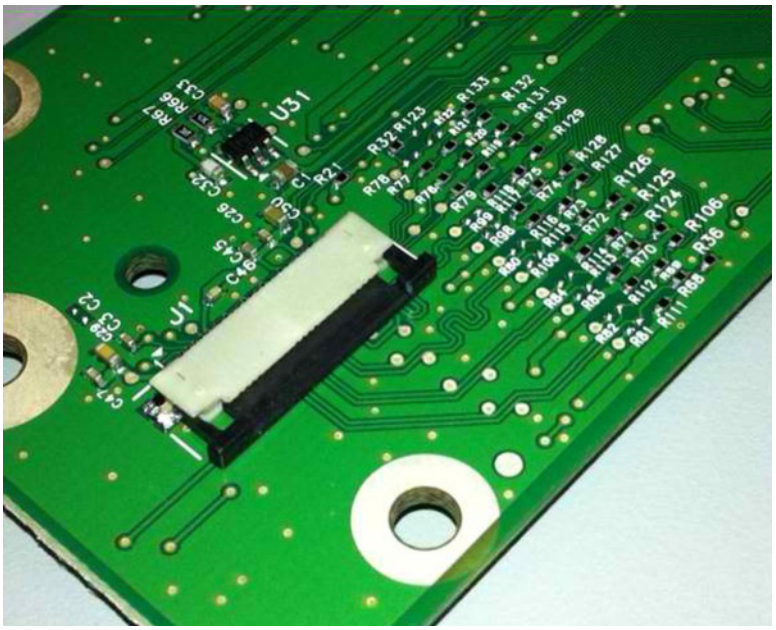

2 Insert the cable with the contacts on the cable facing away from the locking actuator. Insert the cable on top of the actuator.

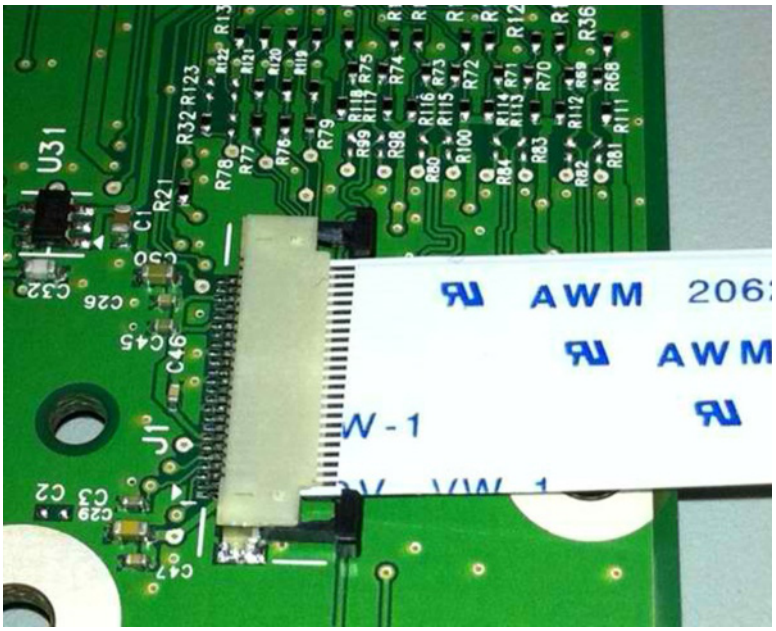

3 Slide the locking actuator towards the connector, locking the cable into place. The cable should not move when this step is performed. If the cable moves, open the actuator, reposition the cable, and then close the actuator to the down position.

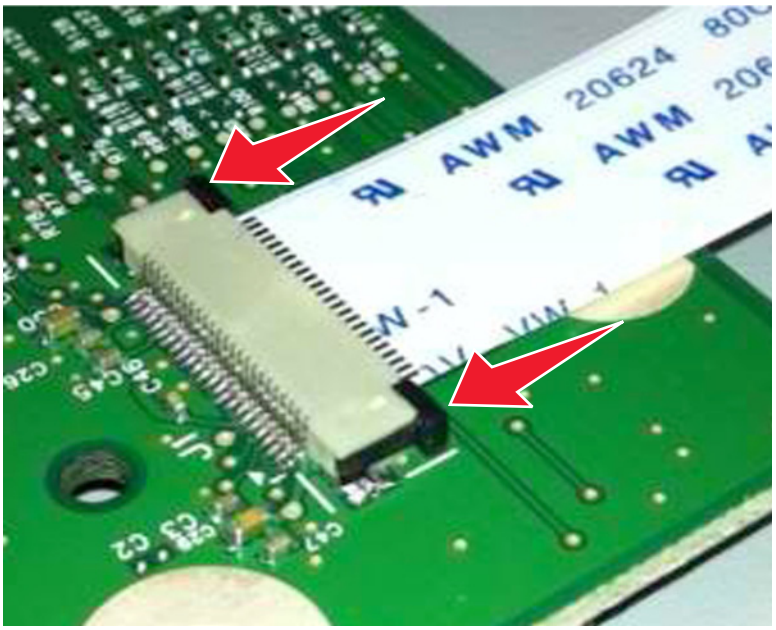

Low Insertion Force (LIF) connector

This FRU contains a Low Insertion Force (LIF) connector. Read the instructions before proceeding.

Warning—Potential Damage: When installing a cable into an LIF connector, care must be taken to avoid bending the edges of the cables and damaging the contacts on the cables.

Inserting a cable into the LIF connector

1 Looking at the connector, take note on which side the contacts are located. Many boards will have the word “contacts” stamped on them to indicate which side of the LIF has the contacts. When looking at the board, take note that the contacts from the board to the connector are located on the side of the connector with the contacts.

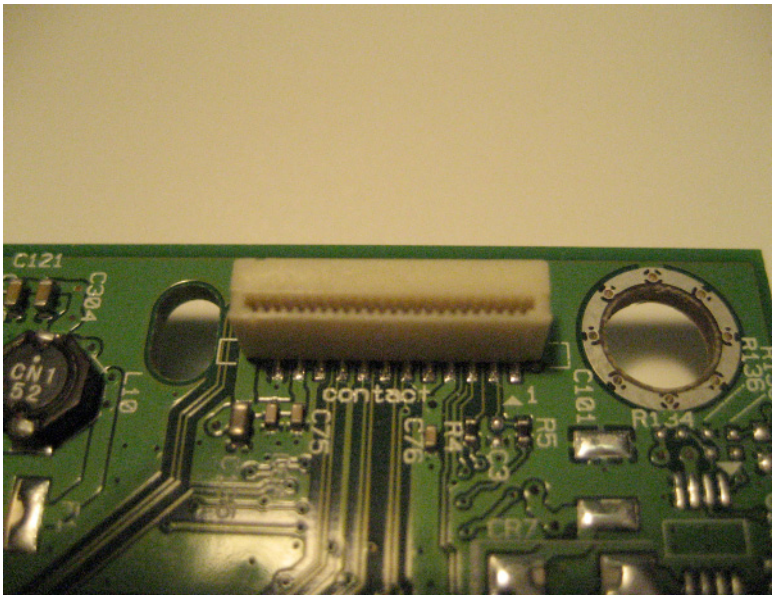

2 Insert the cable squarely into the connector.

Note: Verify that the cable is installed straight into the connector. If the cable is not installed properly, then intermittent failures could occur.

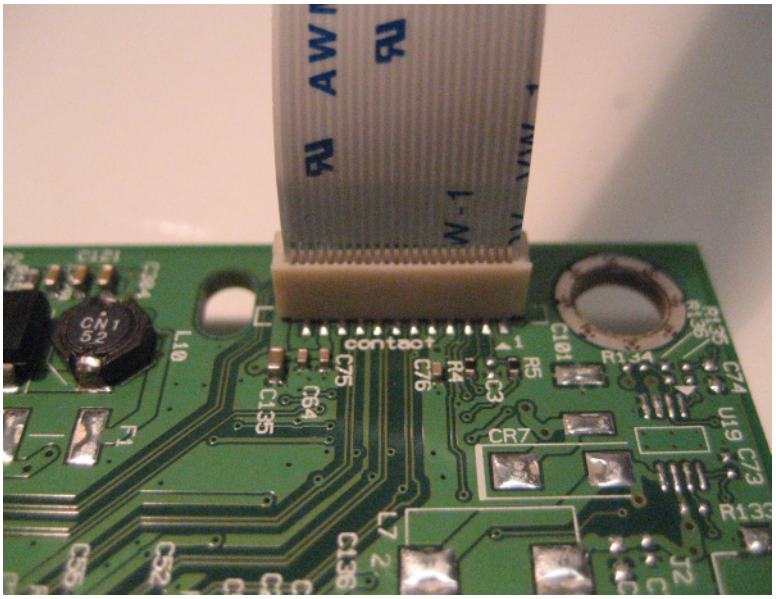

Printhead assembly adjustments

Printhead assembly mechanical adjustment

A printhead needs to be correctly positioned after it has been removed. Use a pencil to mark the screw locations of the old printhead on the metal frame. Align the new printhead relative to the location of the old printhead.

Note: Skew is caused by a sheet being fed through the printer while misaligned. The entire image is rotated relative to the sheet edges. However, a mechanically misaligned printhead causes the horizontal lines to appear skewed, while the vertical lines remain parallel to the vertical edges. There are no adjustments for skew. Check the pick tires for wear, the paper path for obstructions, the fuser for proper setting, and the tray paper guides for fit to the media.

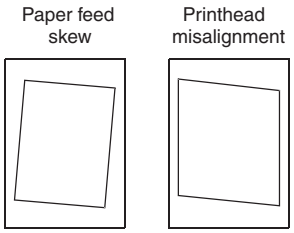

To adjust the printhead:

1. POR into the Diagnostics menu, and print a Quick test page:

   Diagnostics Menu > **Print Tests** > **Tray 1** > **Single**

2. Fold the printed test page on the left side so that a few millimeters of grid lines wrap around the outside of the fold.

3. Fold a second vertical fold near the center so that the left side top edge aligns with the right side top edge.

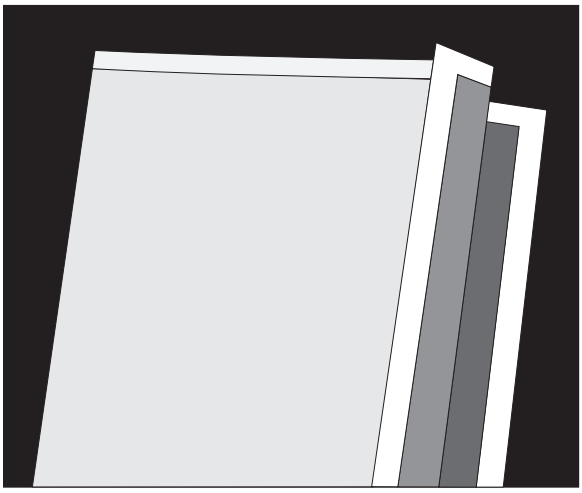

4 If the grid lines of the right flap align below the corresponding lines on the left flap, then adjust the printhead clockwise relative to the printer, and recheck. If the grid lines of the left flap align below the corresponding lines of the right side, then adjust the printhead counterclockwise.

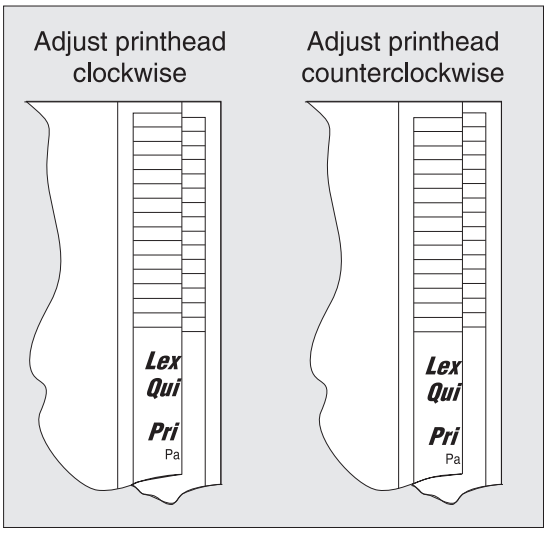

5 Print another Quick test page, and check if adjustments are still needed.

6 After obtaining a properly adjusted image on the paper, tighten all the screws.

7 Align the printhead electronically.

Printhead assembly electronic adjustment

Note: Before aligning the printhead electronically, first align the printhead mechanically.

1 POR into the Diagnostics menu, and print a Quick test page:

Diagnostics Menu > **Registration** > **Quick Test**

Sample Quick test page. Use the actual sheet.

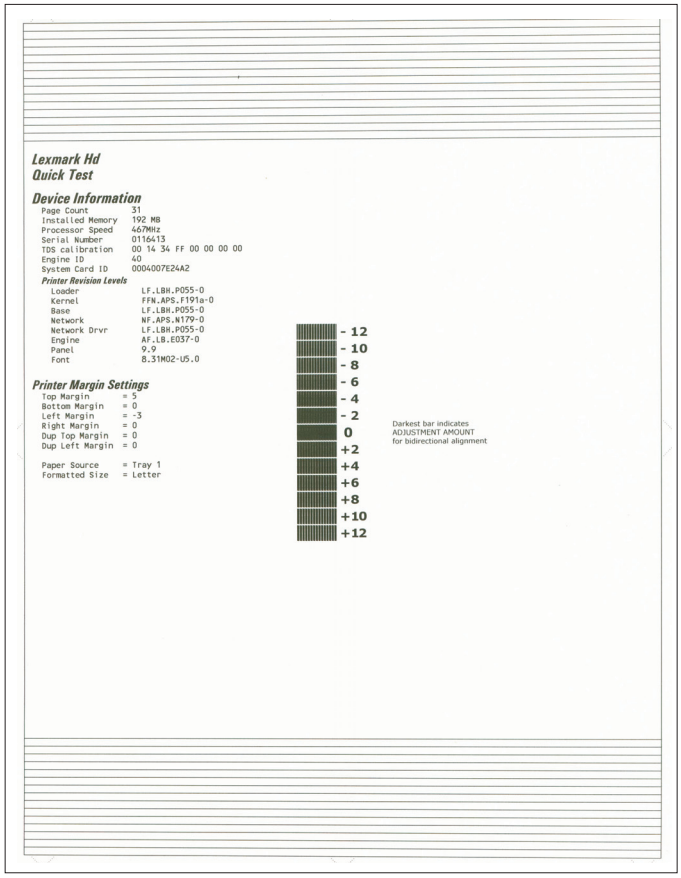

2 From the Registration menu, select the Right margin setting:

Diagnostics Menu > **Registration** > **Right Margin**

3 To determine the Right margin setting:

a Choose the value of the darkest bar on the right side of the Quick test page.

b Add that value to the current Right margin setting found on the left side of the Quick test page.

For example, if the current Right margin setting is -2, and the darkest bar is at +3, then the right margin setting will be equal to +1 (-2+3=+1).

4 Choose and save the desired Right margin setting.

5 Print another Quick test page and check if the darkest bar is at zero. If it is, then check to see if the left, top, and bottom margins are detected. If the darkest bar is not at zero, then repeat steps 3 and 4.

Note: The alignment of the left margin positions the black plane to the right or left. The alignment of the right margin does not alter the margins and should only be used to adjust the printhead.

Removal procedures

Keep the following tips in mind as you replace parts:

- Some removal procedures require removing cable ties. You must replace cable ties during reassembly to avoid pinching wires, obstructing the paper path, or restricting mechanical movement.
- Remove the toner cartridges, imaging unit, and media tray before removing other printer parts. The imaging unit should be carefully set on a clean, smooth, and flat surface. It should also be protected from light while out of the device.
- Disconnect all external cables from the printer to prevent possible damage during service.
- Unless otherwise stated, reinstall the parts in reverse order of removal.
- When reinstalling a part held with several screws, start all screws before the final tightening.

Left side removals

Left cover removal

1. Remove the paper tray.
2. Remove the screw (A) securing the left cover to the front of the printer frame.

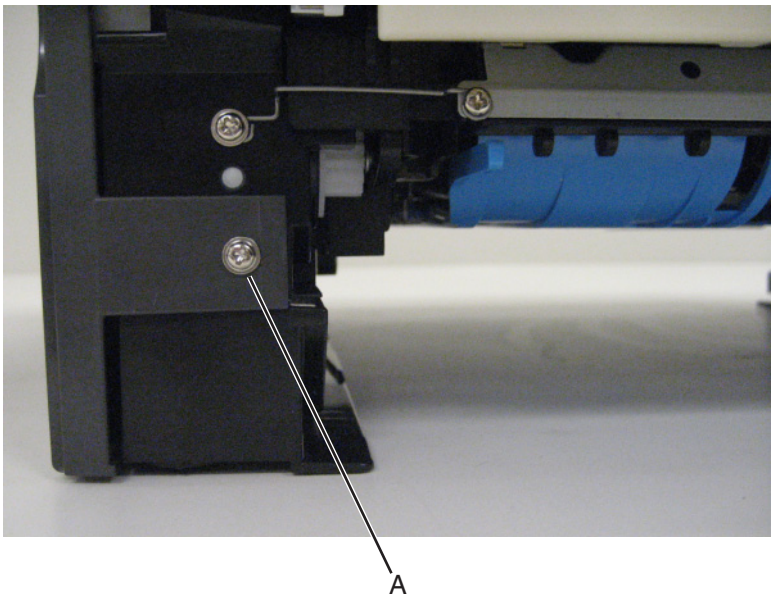

3 Release the two tabs (B) on the bottom of the cover.

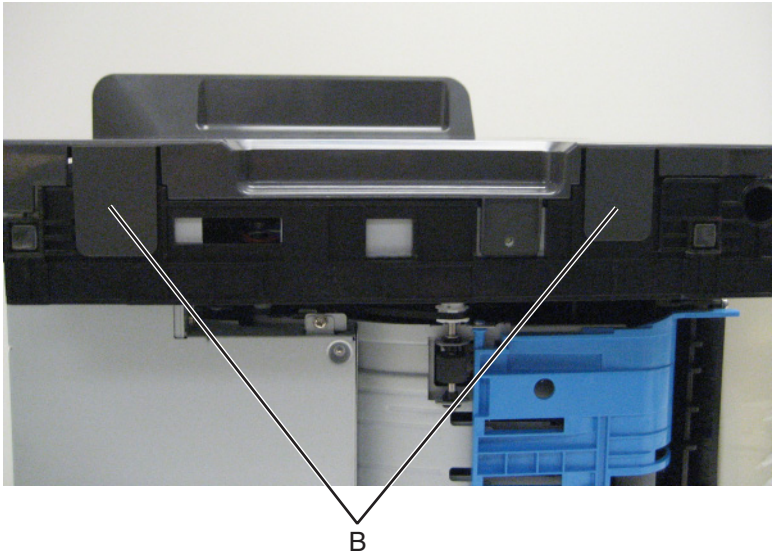

4 Pull the cover forward, and remove it from the printer.

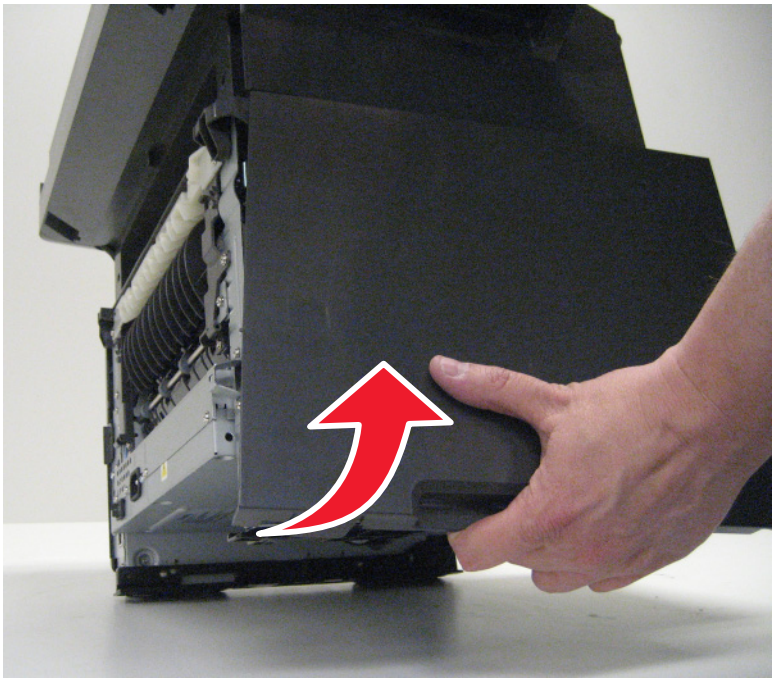

Main drive gearbox removal

1 Remove the left cover. See **“Left cover removal” on page 209**.

2 Squeeze the latch, and then detach the link from the front door.

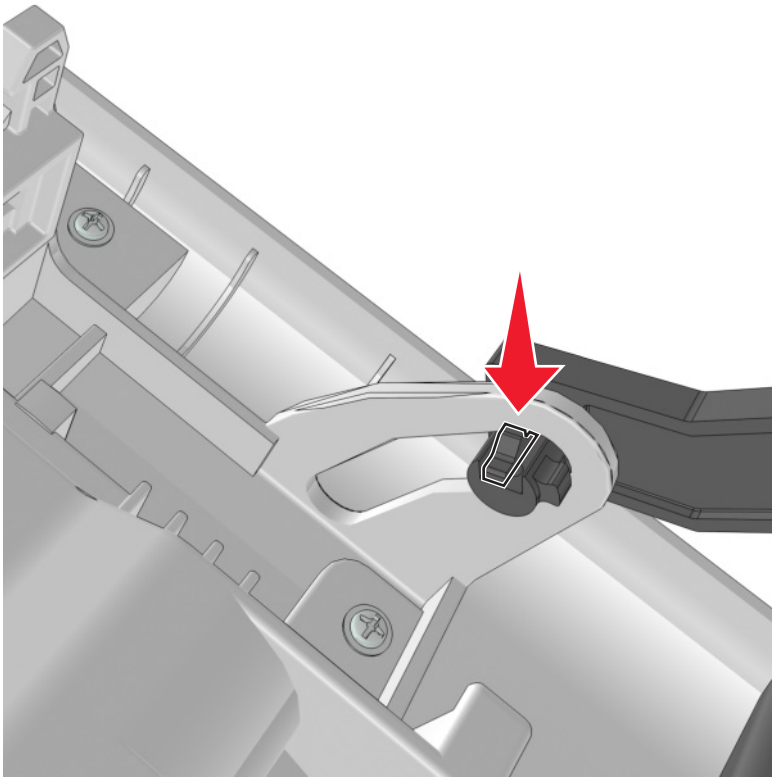

3 Remove the 4 screws (A), and then remove the main drive gearbox.

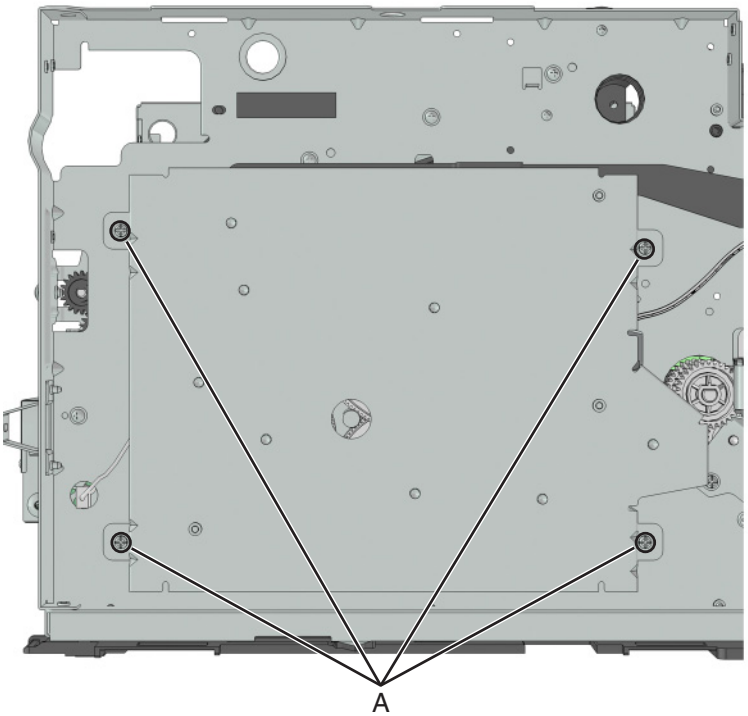

4 Disconnect the cable from the main drive gearbox.

5 Remove the spring (B) and the fuser gear (C).

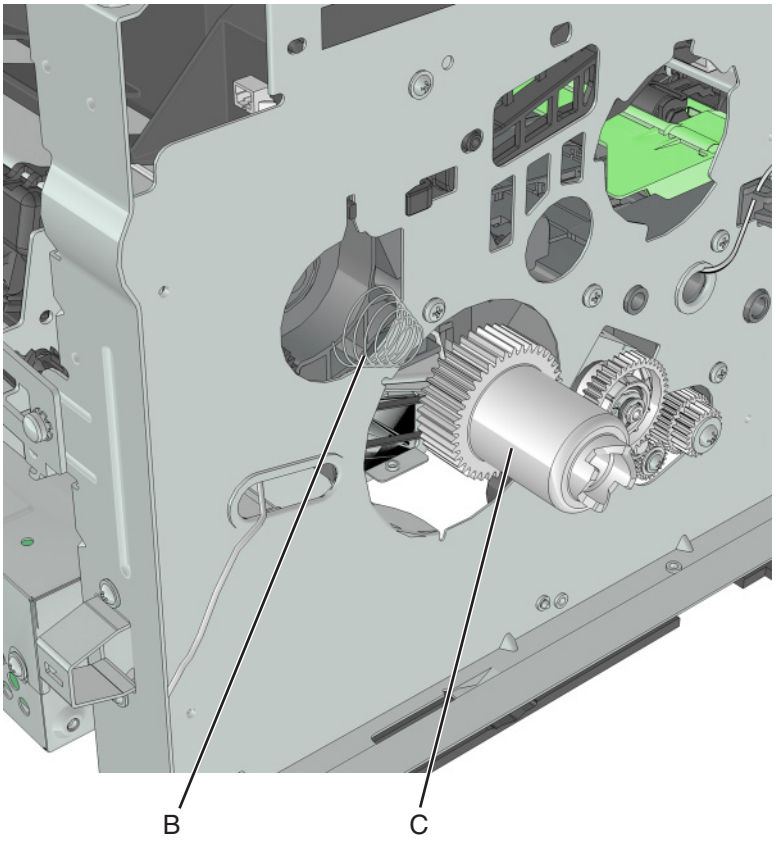

MPF solenoid removal

1 Remove the left cover. See **“Left cover removal” on page 209**.

2 Remove the main drive gearbox. See **“Main drive gearbox removal” on page 211**.

3 Disconnect the MPF solenoid cable from the controller board.

4 Remove the screw (A).

5 Cut the cable (B).

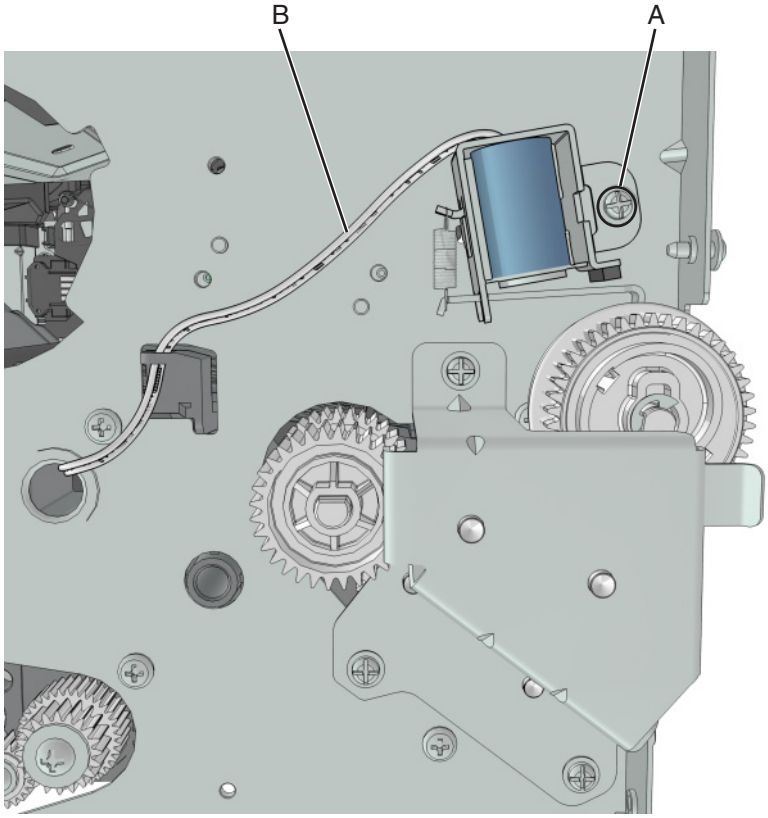

6 Remove the other half of the cable from the printer.

Installation notes:

a Install the MPF solenoid.

b Secure the cable to the holder (A).

c Insert the cable into the hole (B).

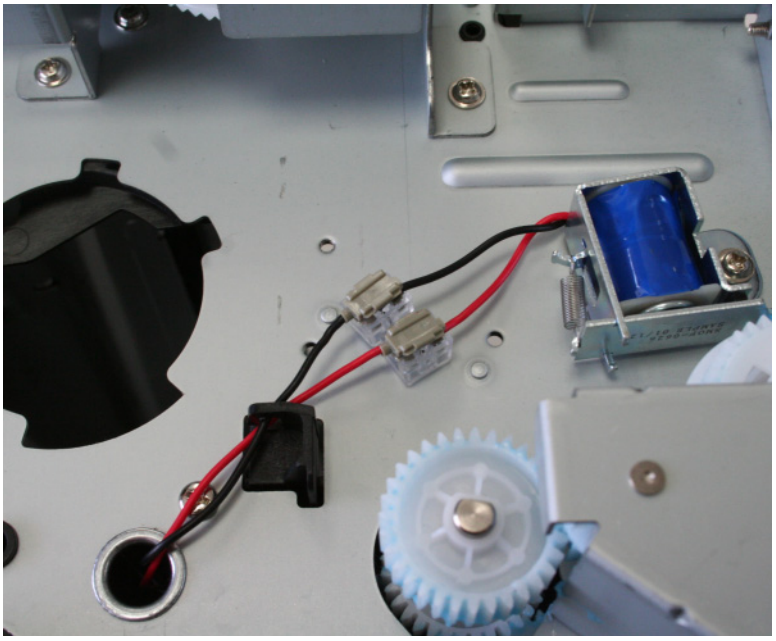

d Route the cable using the new path, and secure it with a cable tie (C).

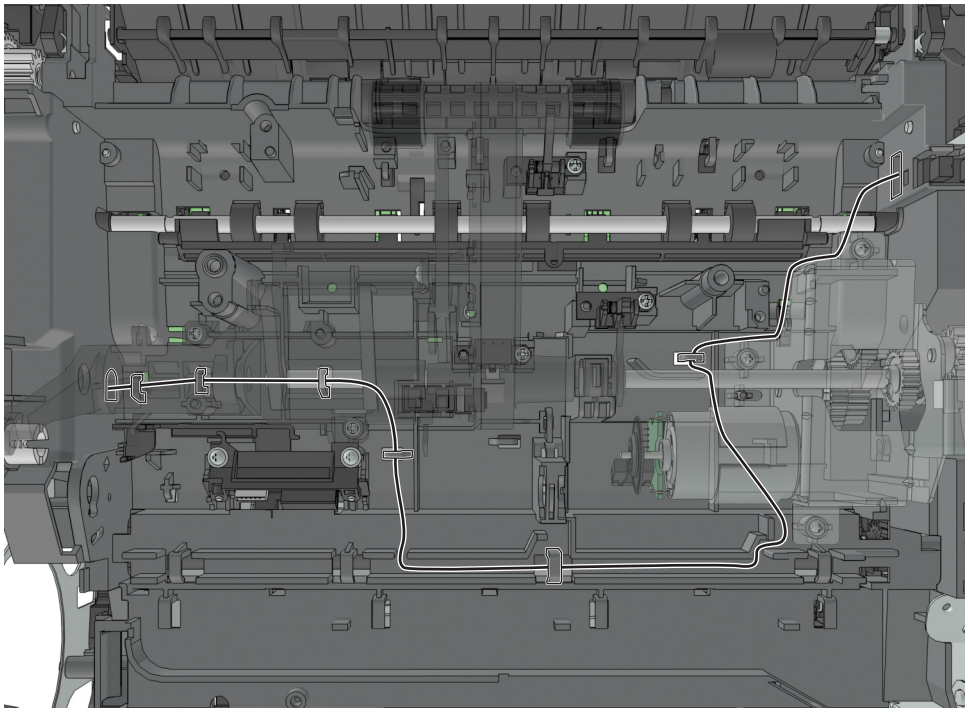

MPF gearbox removal

1. Remove the left cover. See **"Left cover removal" on page 209**.
2. Remove the main drive gearbox. See **"Main drive gearbox removal" on page 211**.
3. Remove the front access cover. See **"Front access cover removal" on page 265**.

4 Disconnect the spring from the printer (A).

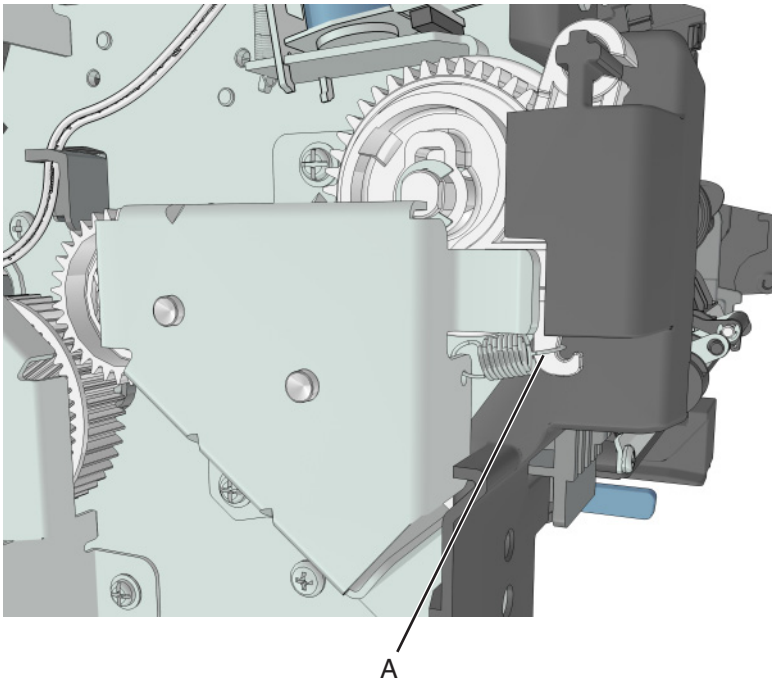

5 Remove the three screws (B), and then remove the front left mount.

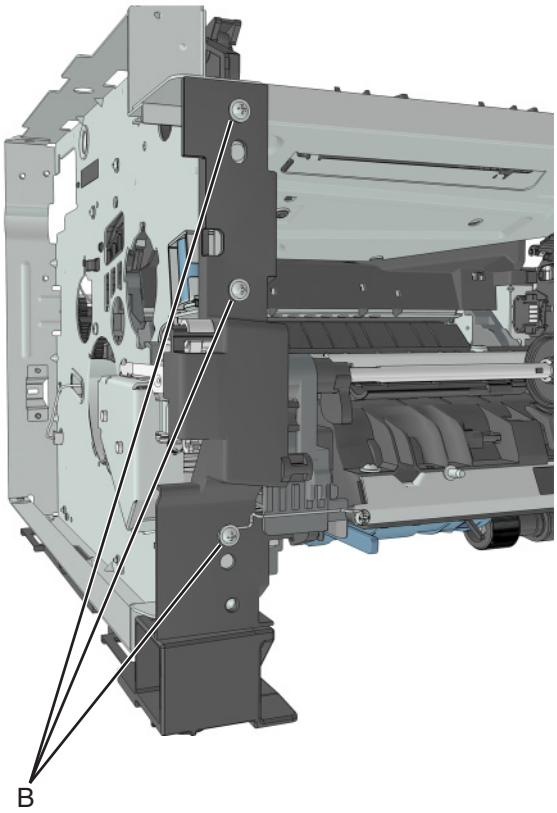

6 Remove the three screws (C), and then remove the MPF gearbox.

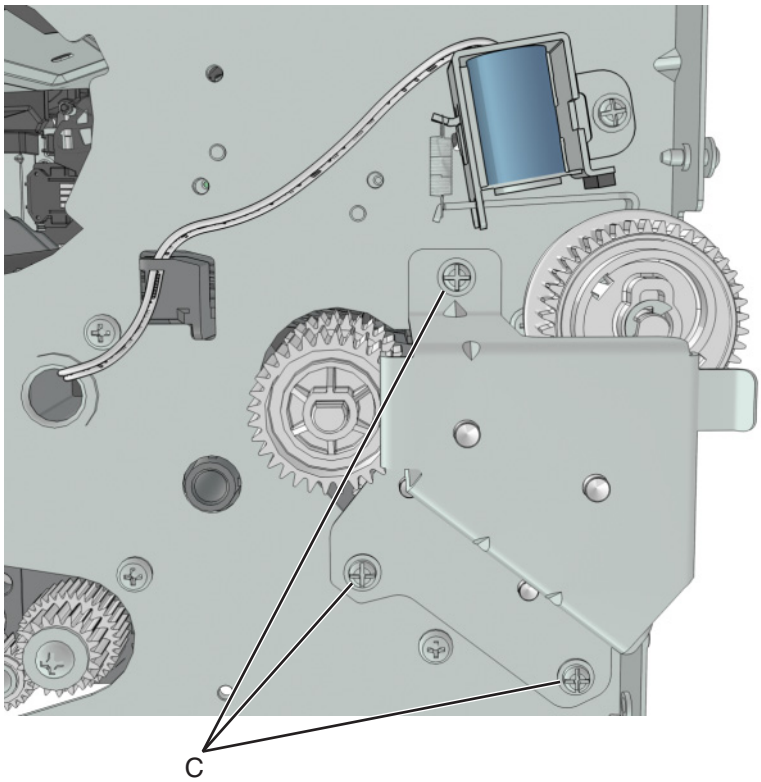

7 Release the two latches (D), and then remove the main input drive gears.

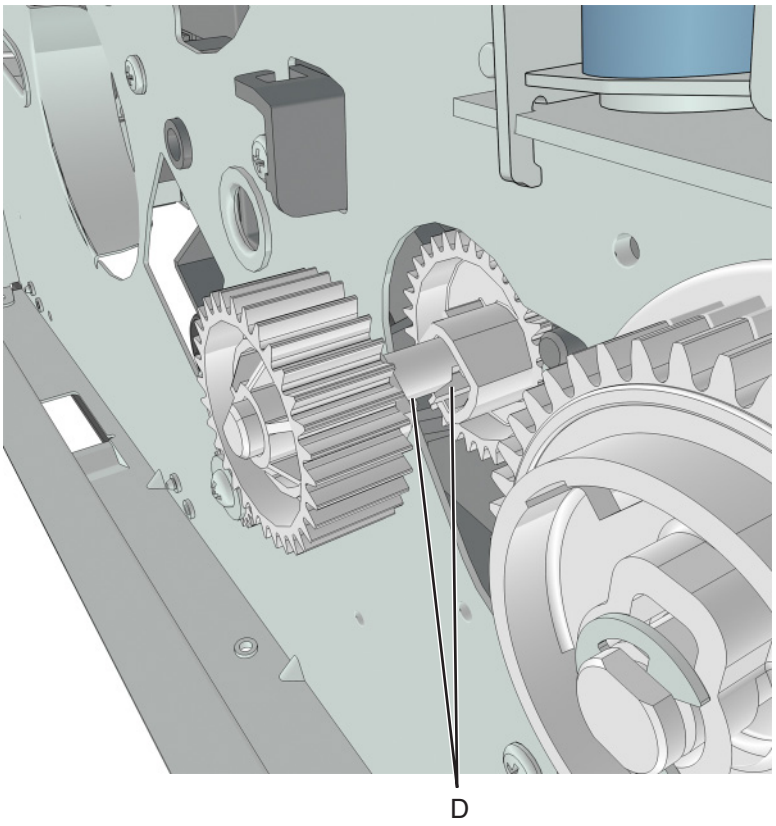

8 Remove the E-clip (E), and then remove the MPF sector gear (F).

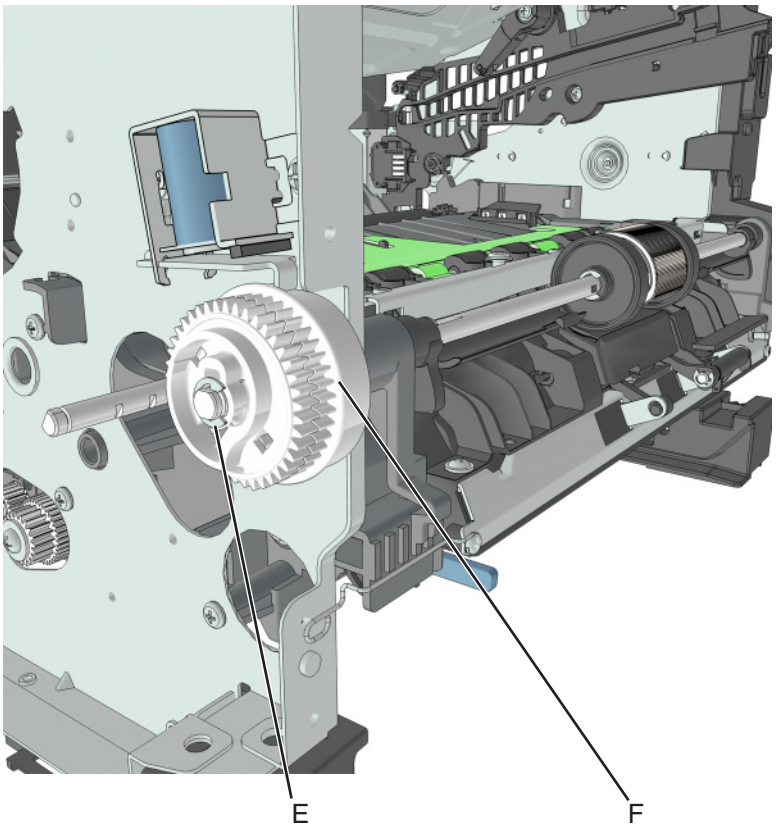

Reverse solenoid removal

1 Remove the right cover. See **“Right cover removal” on page 226**.

2 Remove the left cover. See **“Left cover removal” on page 209**.

3 Remove the rear door and cover. See **“Rear exit door removal” on page 301** and **“Rear cover removal” on page 302**.

4 Remove the scanner assembly. See **“Scanner assembly removal” on page 319**.

5 Remove the top cover. See **“Top cover assembly removal” on page 307**.

6 Remove the cooling fan. See **“Cooling fan removal” on page 230**.

7 Disconnect cable JDSOL1 from the controller board.

8 Remove the two screws (A) securing the reverse solenoid.

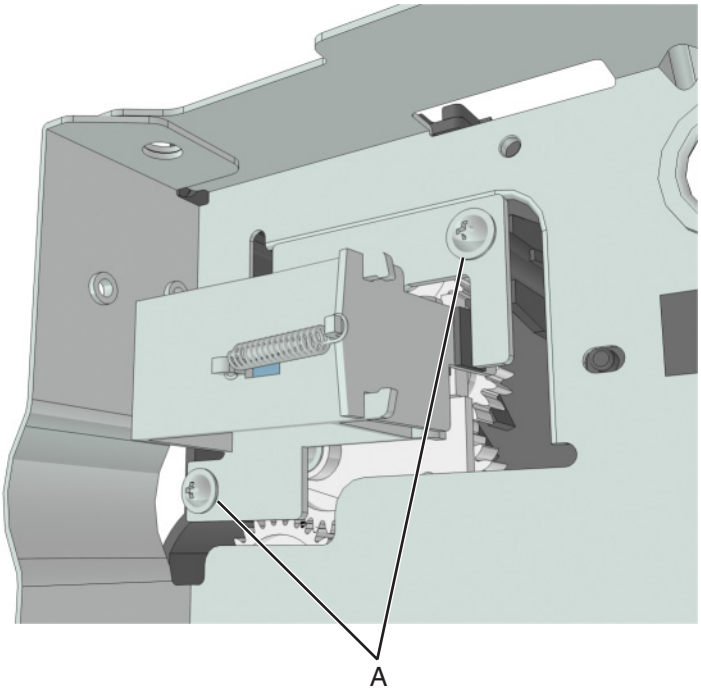

ACM clutch removal (MX310, MX410)

1 Remove the left cover. See **“Left cover removal” on page 209**.

2 Remove the main drive gearbox. See **“Main drive gearbox removal” on page 211**.

3 Position the printer on its rear.

4 Use a small flat-head screwdriver to block the roller (A) and prevent the shaft from rotating.

5 While blocking the roller, remove the screw (B).

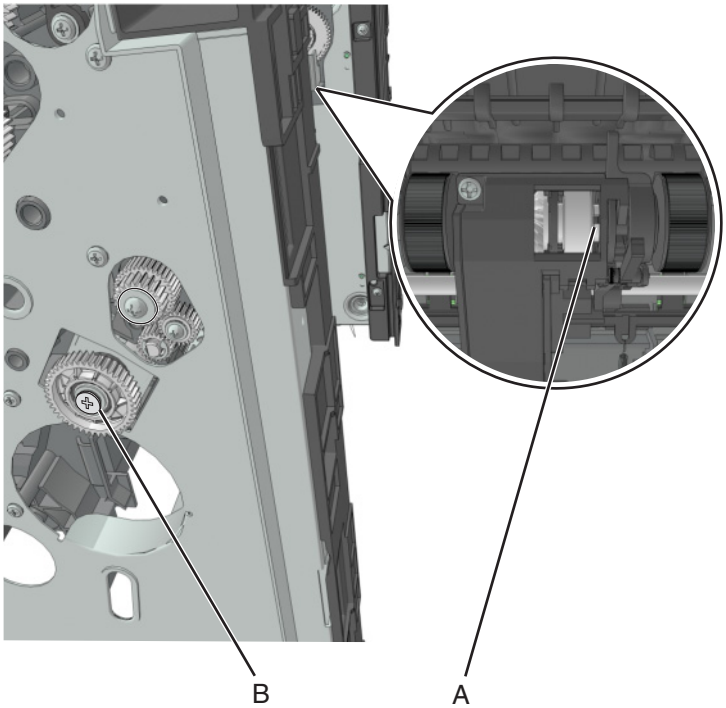

6 Pull out the ACM clutch, and cut cable close to the clutch to detach it.

Installation notes:

a Pull the cable to remove any slack, and remove any shrink tubing holding the wires together.

b On the replacement clutch, measure 4 inches from the clutch, and then cut the cable.

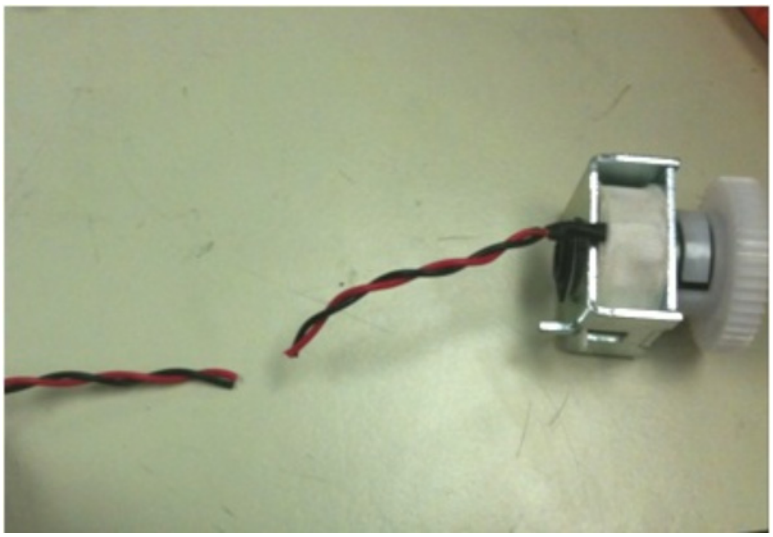

c Pull out the shaft.

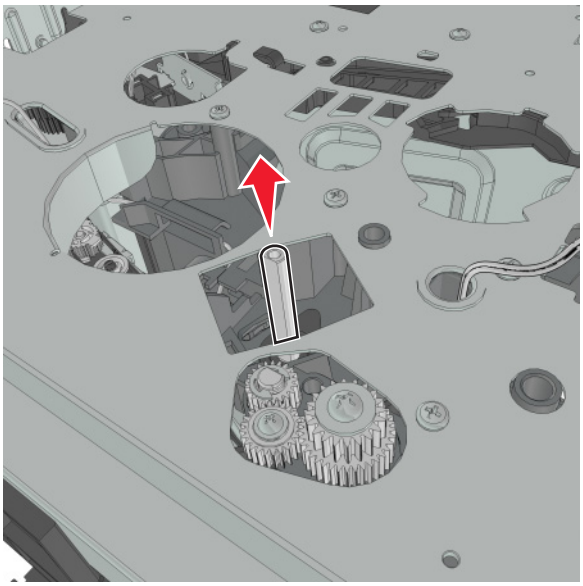

d Install the replacement clutch on the shaft.

e Insert the red wire from the printer into the insulated displacement connector (IDC).

Note: Make sure that the wire is positioned under the contact element.

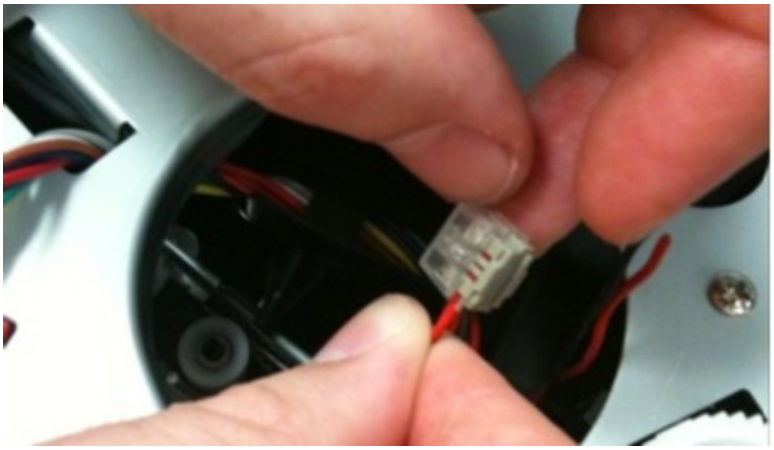

f Insert the red wire from the clutch into the IDC.

Note: Make sure that the wire is positioned under the contact element.

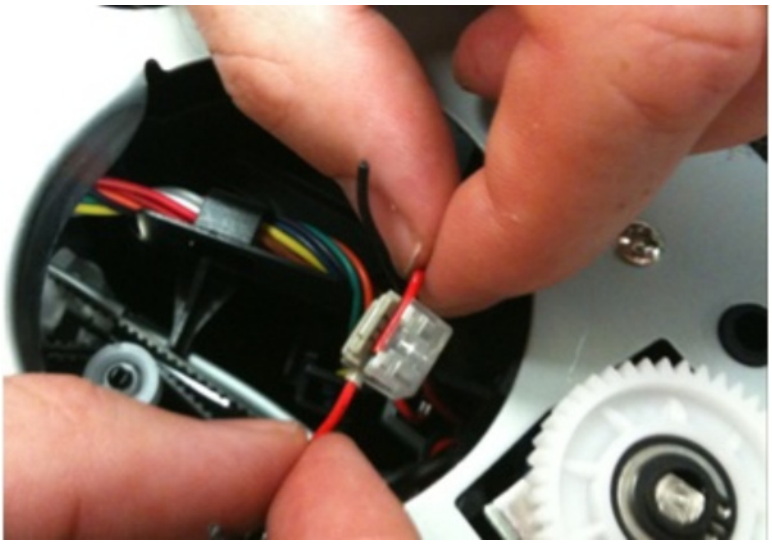

g Squeeze the IDC to partially lock the wires in place, and then use a pair of pliers to crimp the IDC.

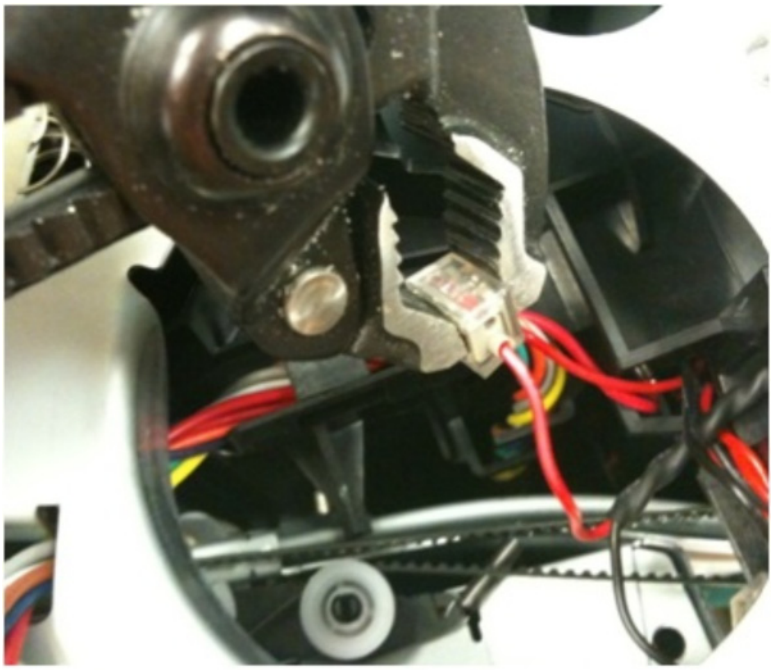

h Repeat steps e–g for the black wire.

i Tuck the IDCs securely above the duplex.

Note: If needed, use a cable tie to secure the cable in place. Make sure cable tie does not obstruct the paper path.

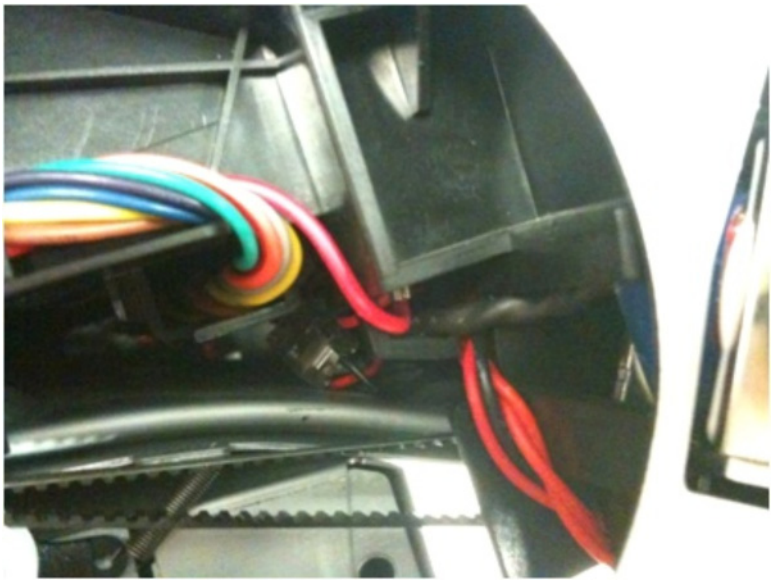

j Print the menu pages to test the printer.

Cartridge gearbox removal

1 Remove the left cover. See **“Left cover removal” on page 209**.

2 Remove the four screws (A) securing the cartridge gearbox.

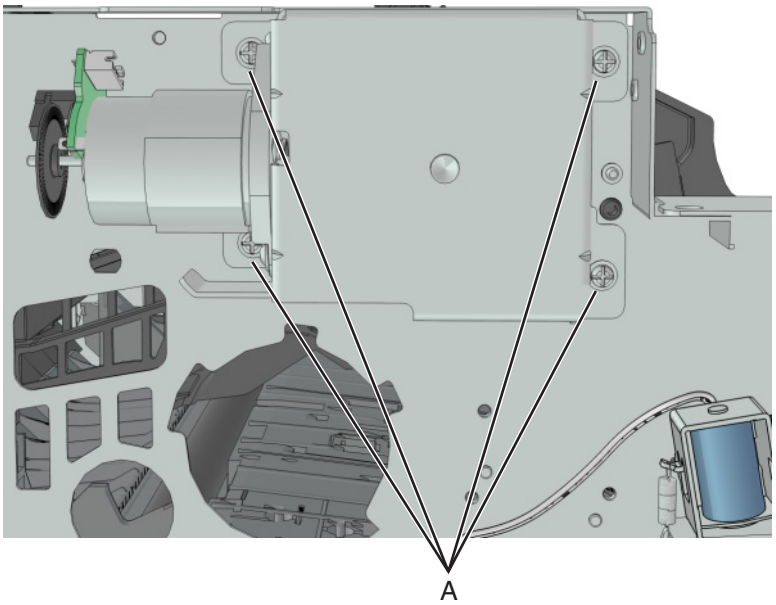

3 Disconnect the cable from the cartridge gearbox.

Duplex gear assembly removal

1 Remove the left cover. See **“Left cover removal” on page 209**.

2 Remove the rear door and cover. See **“Rear exit door removal” on page 301** and **“Rear cover removal” on page 302**.

3 Remove the power supply. See **“Power supply removal” on page 272**.

4 Remove the power supply shield. See **“Power supply shield removal” on page 273**.

5 Remove the duplex. See **“Duplex removal” on page 274**.

6 Position the printer so that it sits on its right side.

7 Remove the E-clip (A).

8 Remove the screw (B).

9 Remove the screw (C).

10 Remove the three gears.

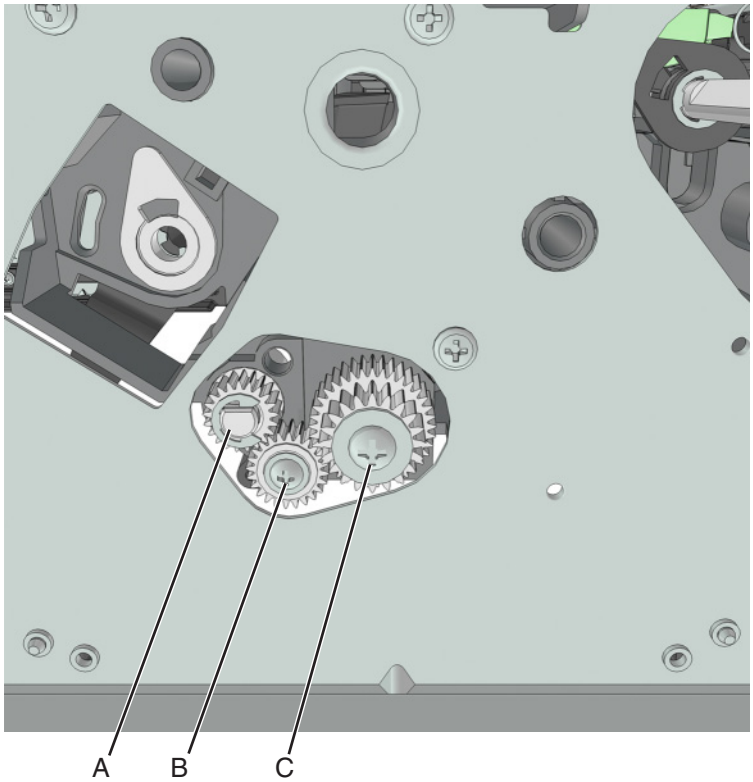

11 From behind the three gears, remove the duplex coupling (D).

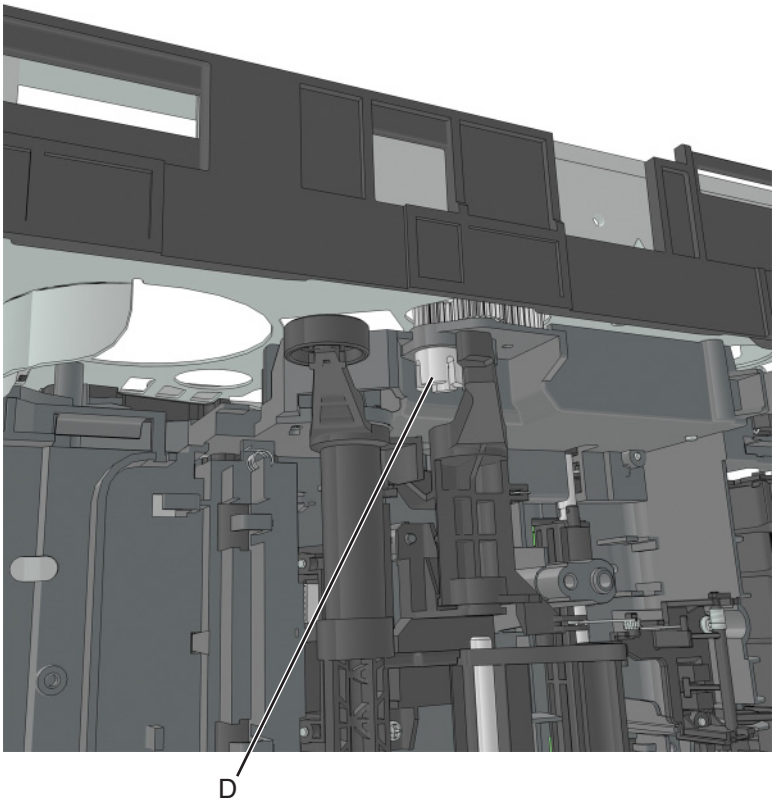

12 Remove the duplex link (E) from the duplex.

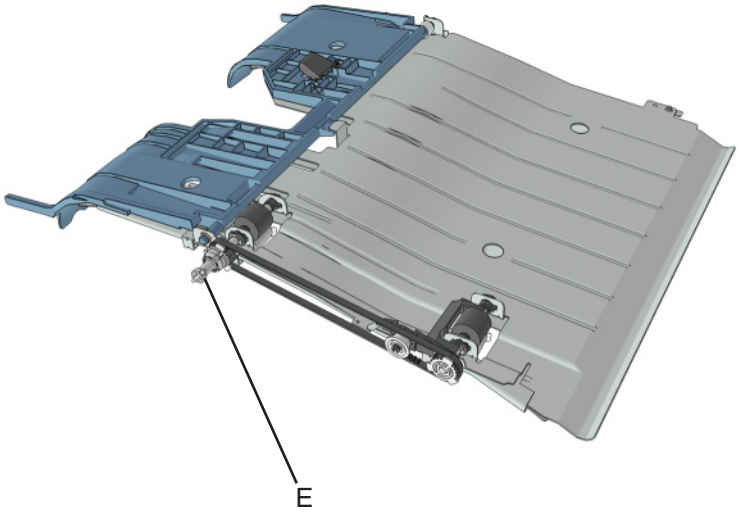

Right side removals

Right cover removal

1 Remove the paper tray.

2 Remove the screw (A) securing the the right cover to the front of the printer frame.

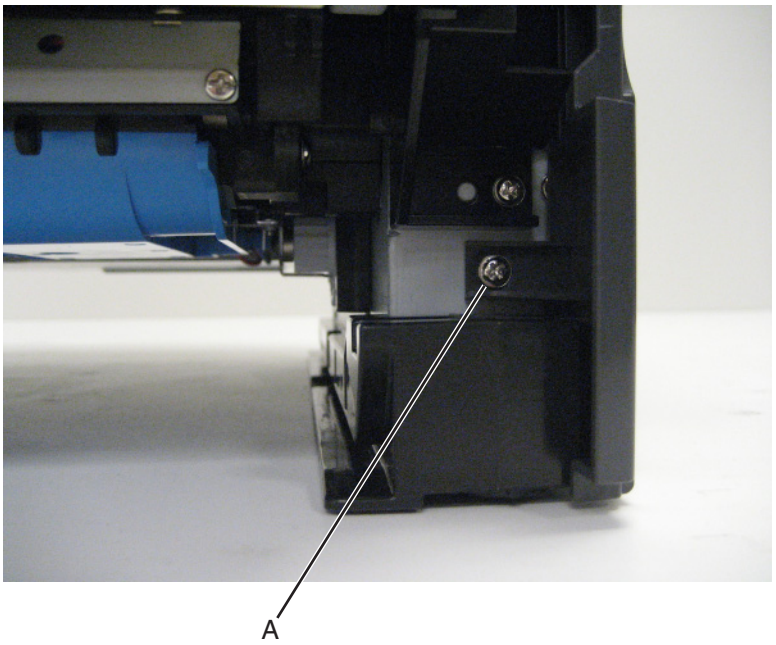

3 Open the memory access cover.

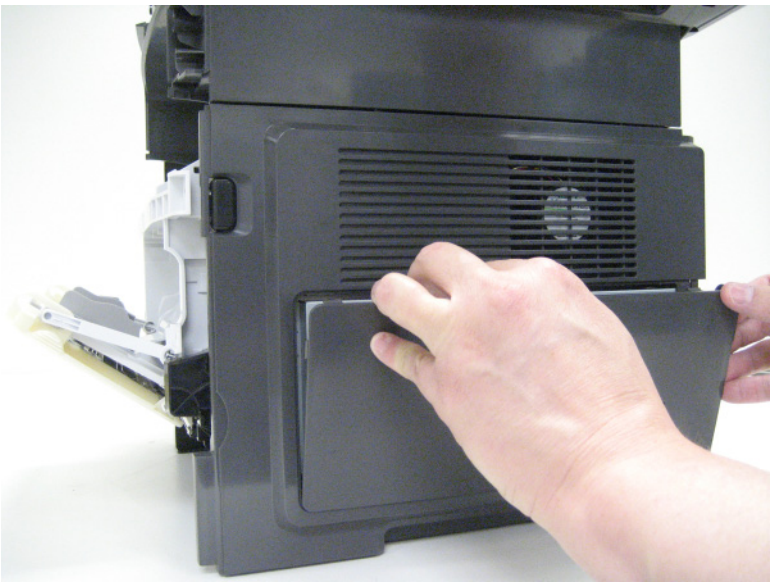

4 Remove the two screws (B) securing the right cover to the RIP shield.

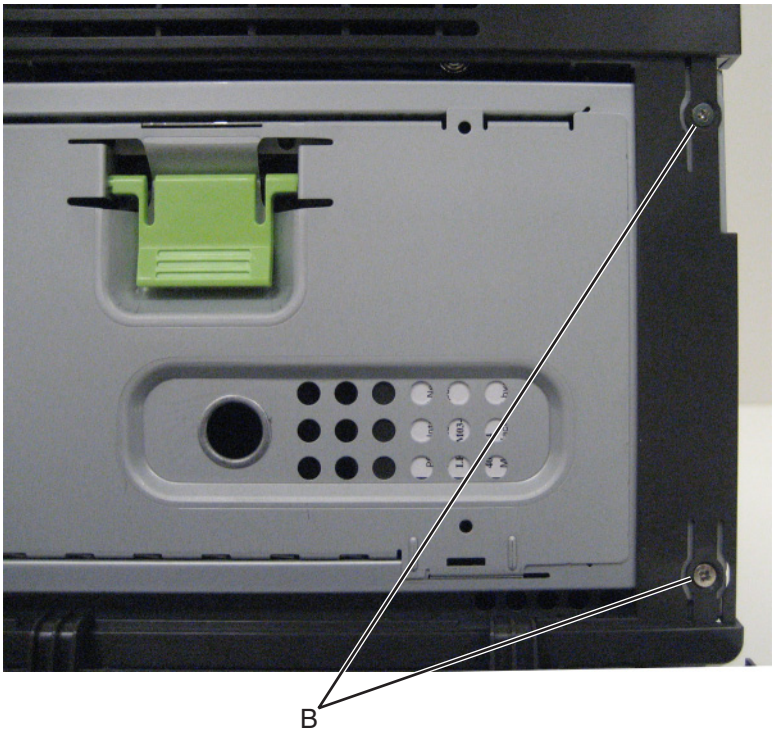

5 Open the front cover.

6 Slightly lift the printer, slide the right cover forward, and pull out and away from the printer.

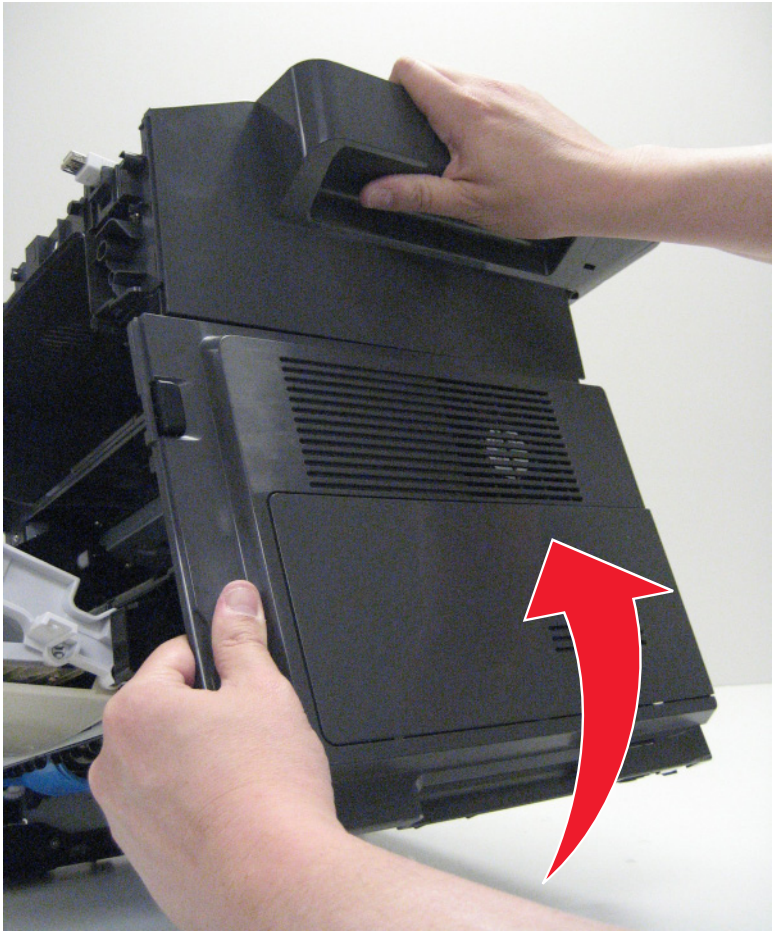

Memory access door removal

1 Open the memory access door.

2 Gently release the latches (A) securing the access door to the right cover.

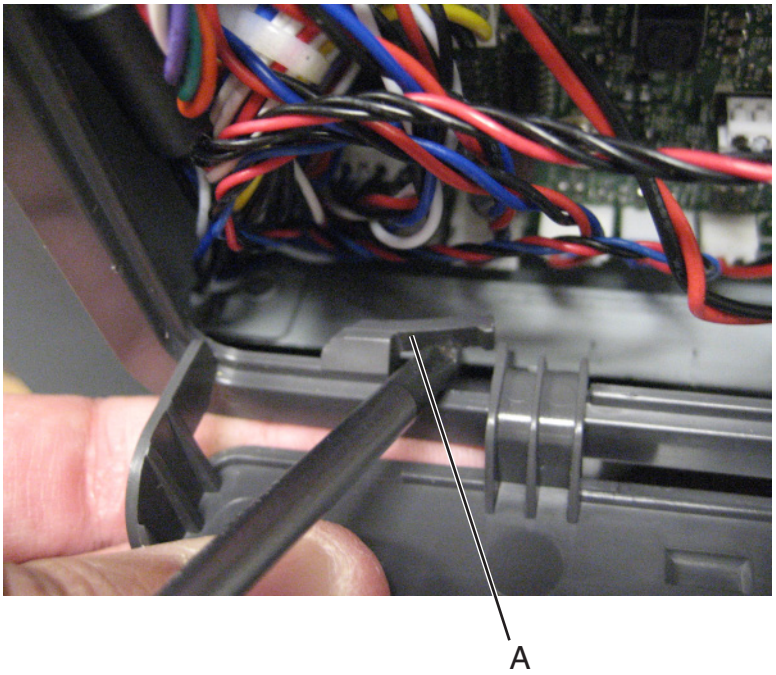

3 Slide the access door to release the hinges, then remove it from the right cover.

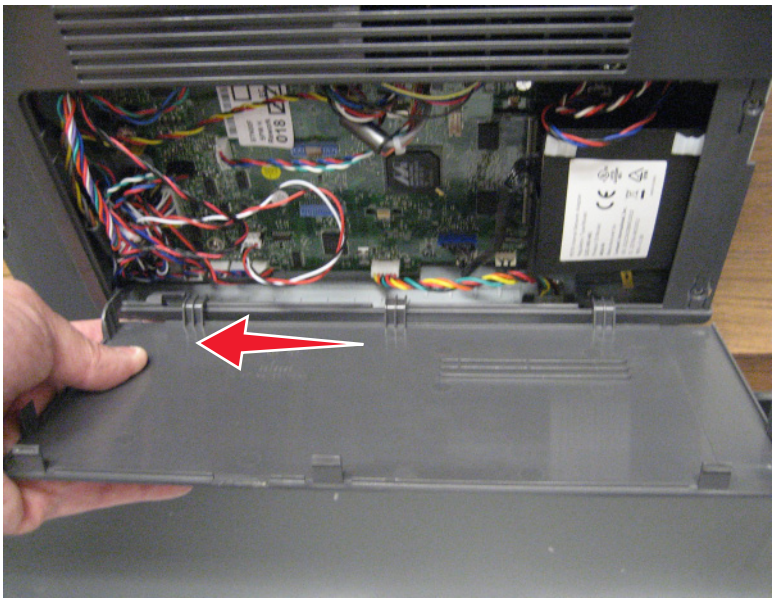

Tray present sensor removal

1 Remove the right cover. See **"Right cover removal" on page 226**.

2 Disconnect the cable (A) from the tray present sensor.

3 Pry to remove the sensor retainer (B).

Note: The retainer is secured to the sensor by an adhesive.

4 Release the three latches (C), and then pry to remove the tray present sensor.

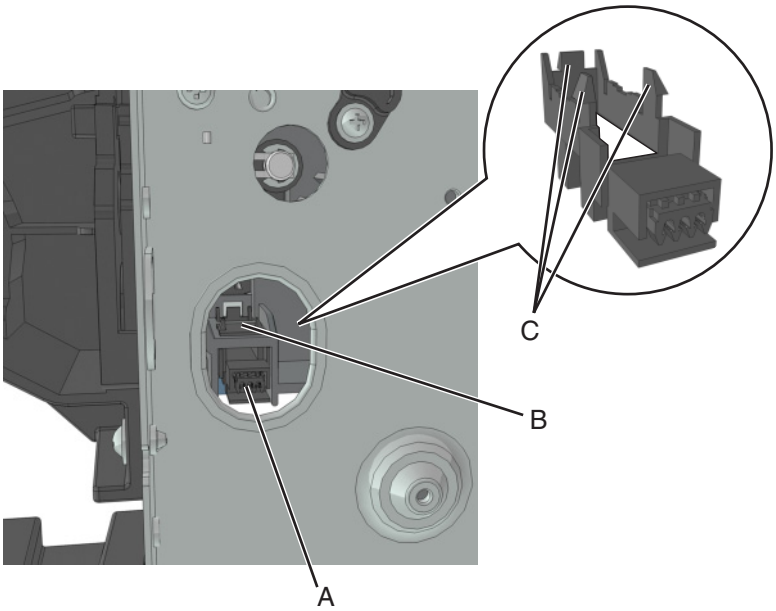

Cooling fan removal

1 Remove the right cover. See **"Right cover removal" on page 226**.

2 Disconnect the cable JFAN1 from the controller board.

3 Remove the two screws (A), and then remove the fan.

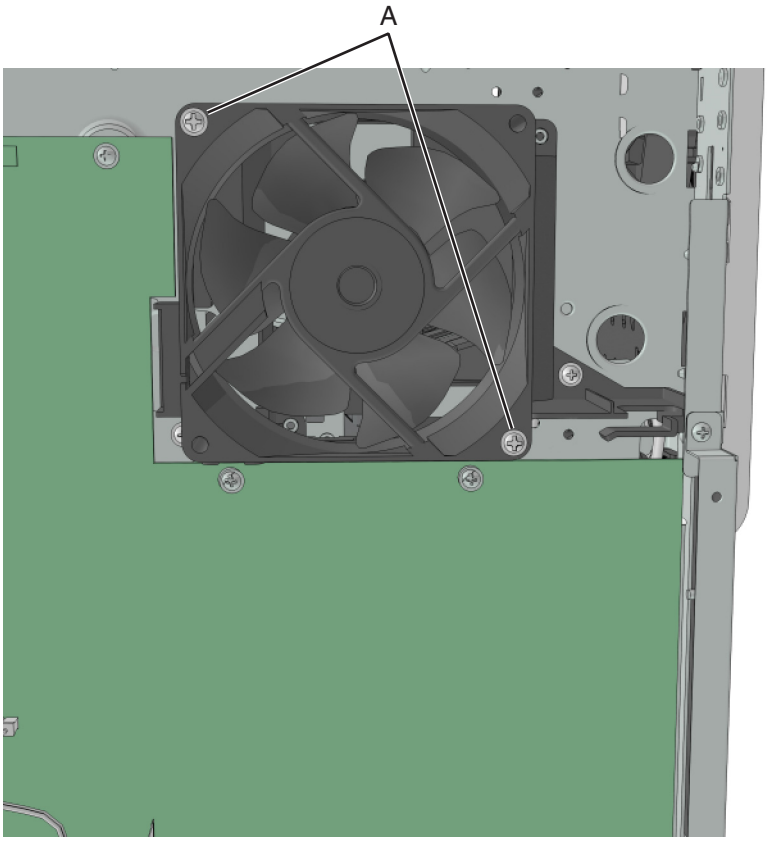

Controller board removal

1 Remove the right cover. See **"Right cover removal" on page 226**.

2 Remove the controller board shield. See **"Controller board shield removal" on page 234**.

3 Disconnect all cables from the controller board.

Installation warning: The cables (JCART1 and JLIFT) are not interchangeable. JCART1 connects to the cartridge motor, while JLIFT goes to the lift motor. Plugging these connectors incorrectly could lead to damage on the imaging unit.

4 Remove the screw (A) from the rear side of the printer.

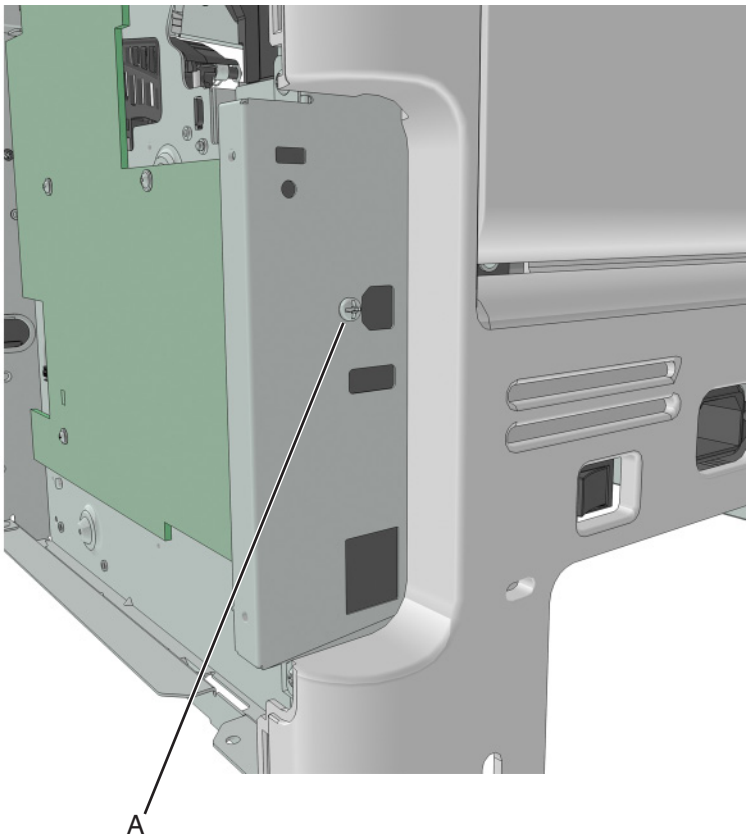

5 Remove the seven screws (B) securing the controller board.

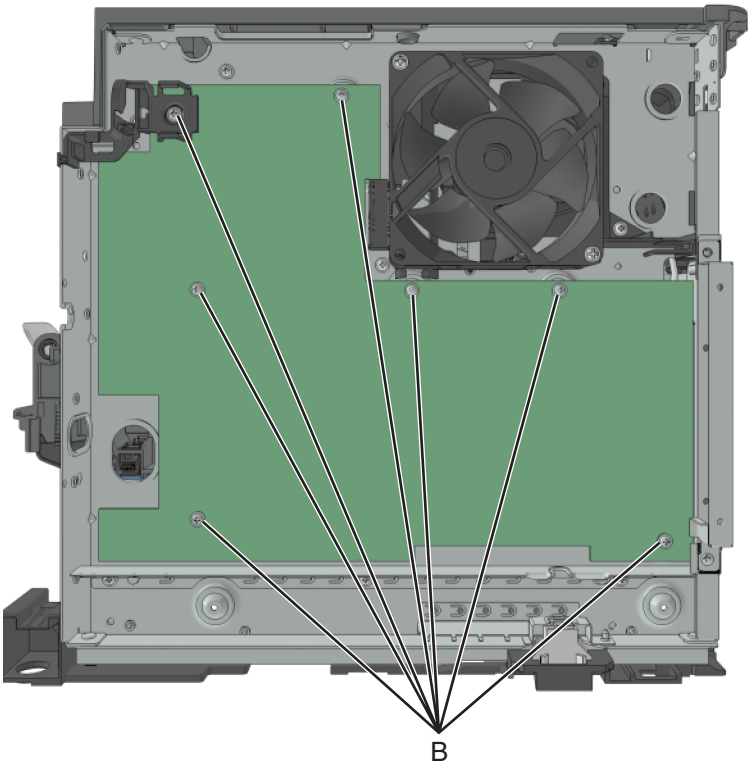

Installation note: After the new controller board is installed, perform scanner manual registration, see **"Scanner manual registration" on page 178** and printhead registration, see **"Printhead assembly adjustments" on page 206**.

Controller board shield removal

1 Remove the right cover. See **“Right cover removal” on page 226**.

2 Remove the two screws (A).

3 Remove the screw (B) securing the shield to the printer.

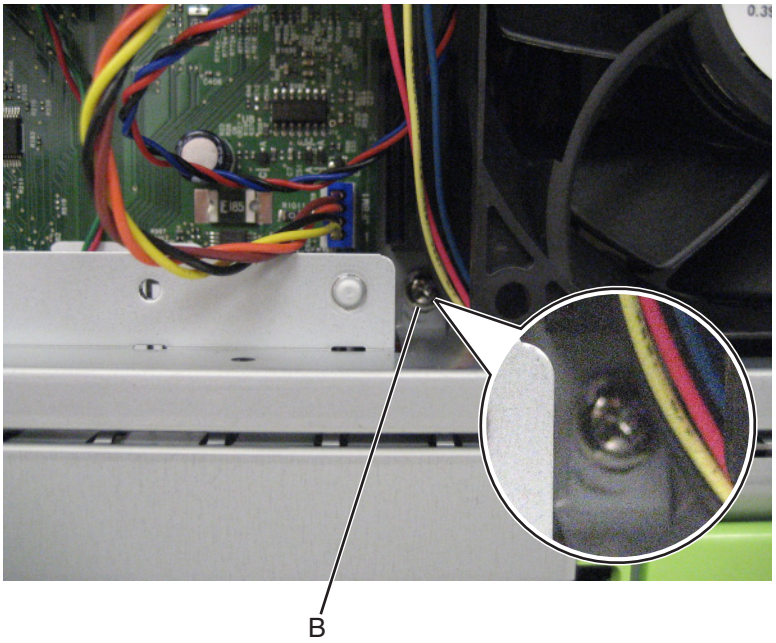

4 Remove the screw (C) securing the shield to the printer.

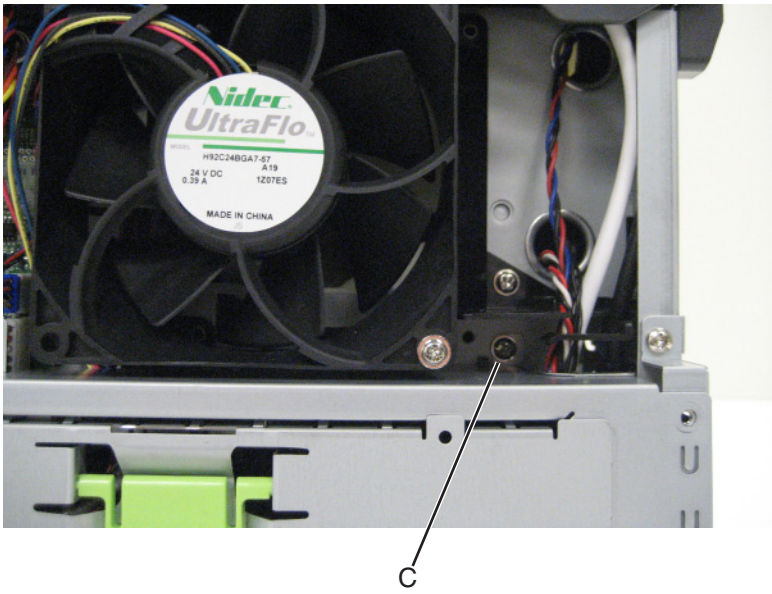

5 Carefully remove the shield from the printer.

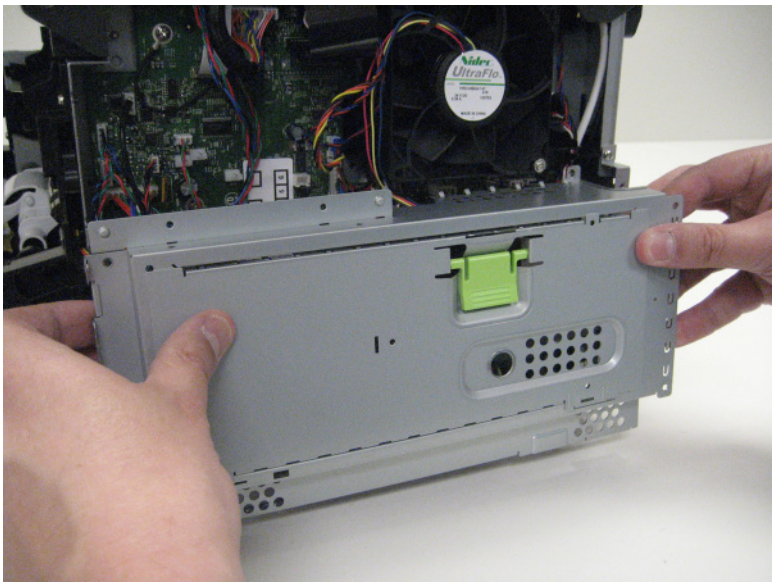

Upper shield removal

1 Remove the right cover. See **“Right cover removal” on page 226**.

2 Remove the three screws (A) securing the upper shield.

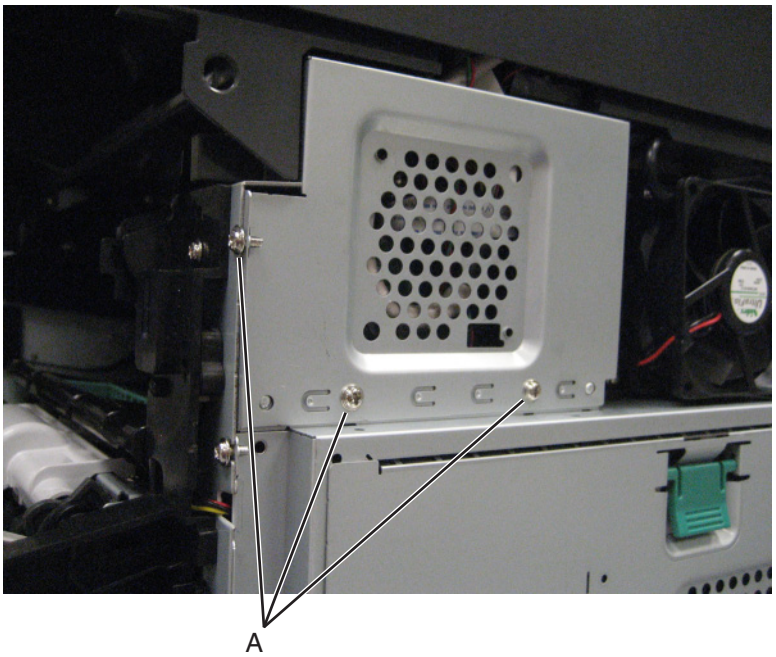

Toner cartridge smart chip contact removal

1 Remove the right cover. See **“Right cover removal” on page 226**.

2 Remove the controller board shield. See **“Controller board shield removal” on page 234**.

3 Remove the controller board. See **“Controller board removal” on page 231**.

4 Remove the two screws (A).

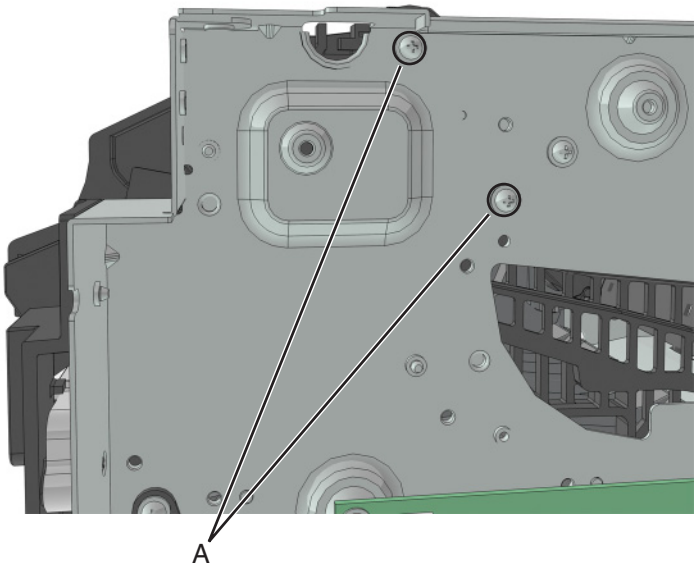

5 Remove the two screws (B), and then detach the right cartridge guide.

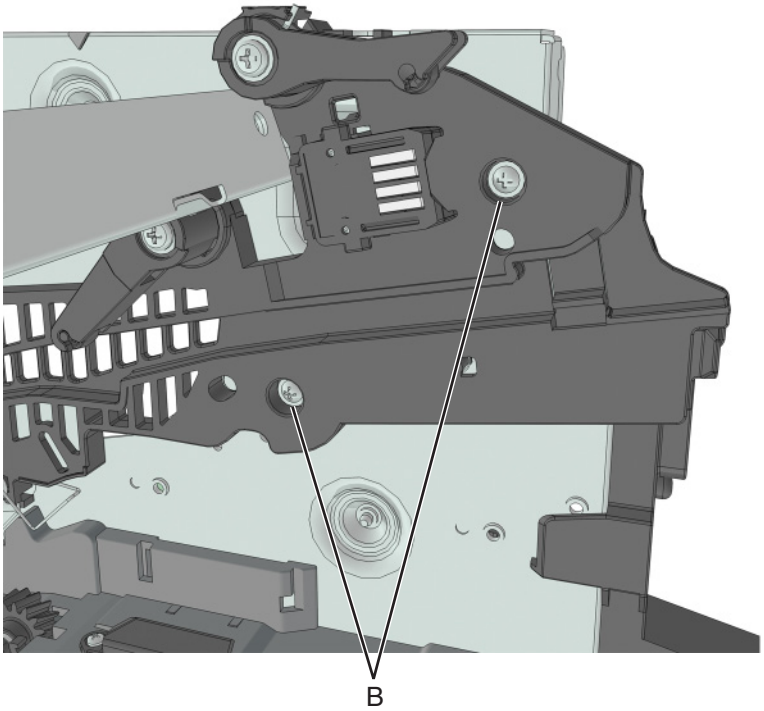

6 From behind the right cartridge guide, release the 4 latches (C) to detach the toner cartridge smart chip contact.

Note: Pay attention to the original position of the spring and the actuators.

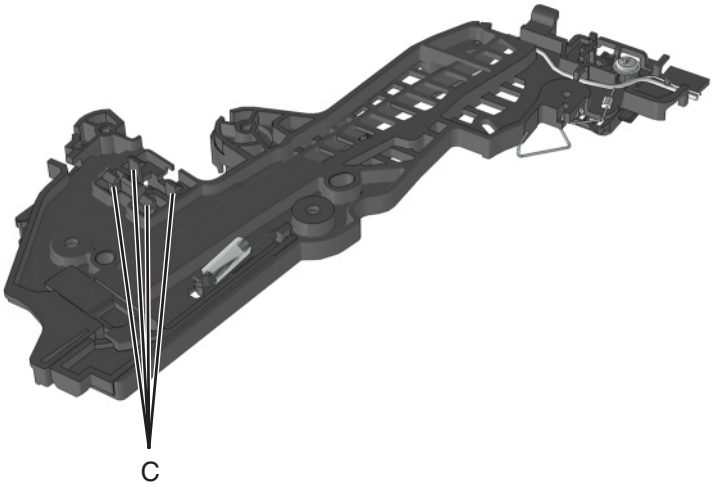

Installation notes:

a Test for proper installation of the spring and the actuators.

b Press the cartridge actuator. The cartridge lock should move up.

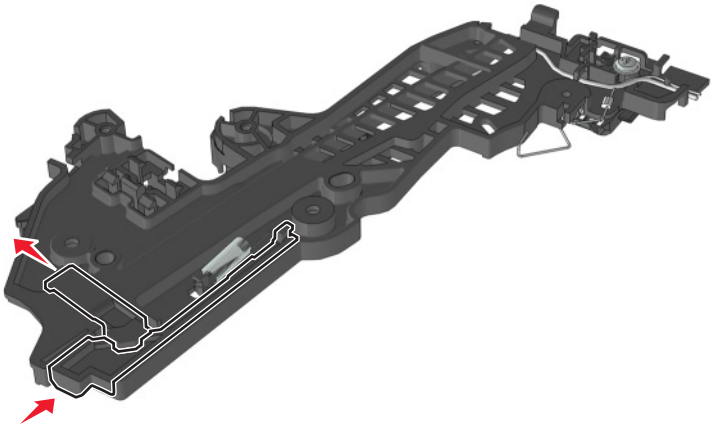

c Release the cartridge actuator. The cartridge lock should move back to its original position.

Modem removal

1 Remove the right cover. See **"Right cover removal" on page 226**.

2 Remove the controller board shield. See **"Controller board shield removal" on page 234**.

3 Remove the toroid from the modem cable.

4 Disconnect the modem connector (JFAX1) from the controller board.

5 Loosen the two screws (A) securing the modem to the controller board shield.

6 Lift the modem to release, and then remove.

Front removals

Left front mount removal

1 Remove the left cover. See **“Left cover removal” on page 209**.

2 Remove the front access cover. See **“Front access cover removal” on page 265**.

3 Remove the three screws (A), and then remove the left front mount.

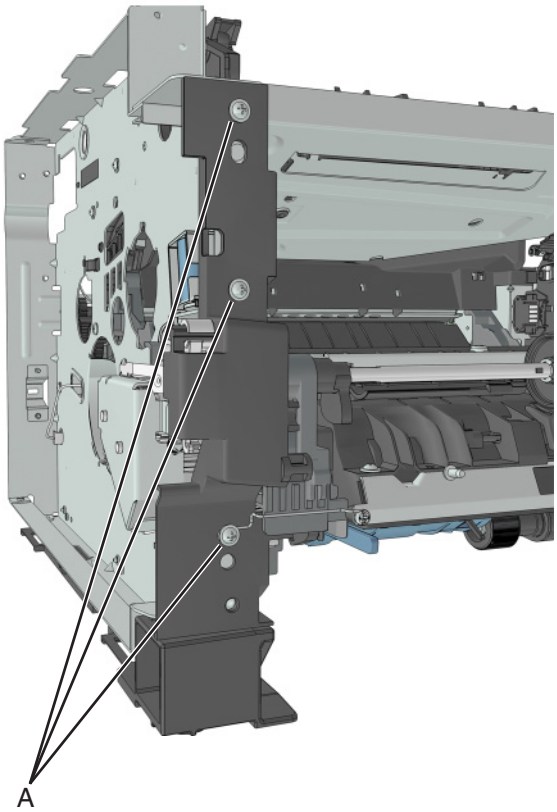

Right front mount removal

1 Remove the right cover. See **"Right cover removal" on page 226**.

2 Disconnect all control panel cables from the controller board.

3 Disconnect the cable JCVR1 from the controller board.

4 Remove the four screws (B), and then remove the right front mount.

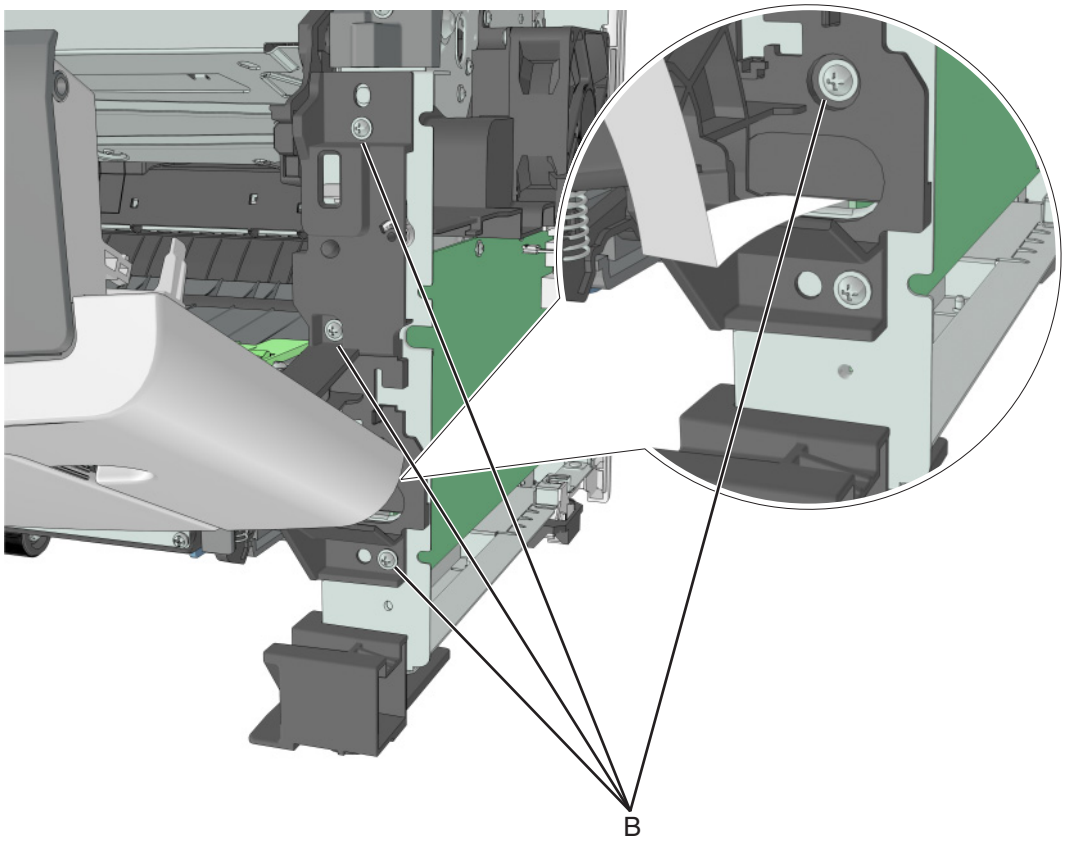

Transfer roll removal

Warning—Potential Damage: Do not touch the transfer roll with bare hands. Oil from the skin can damage it.

1 Squeeze the latches at each end of the transfer roll.

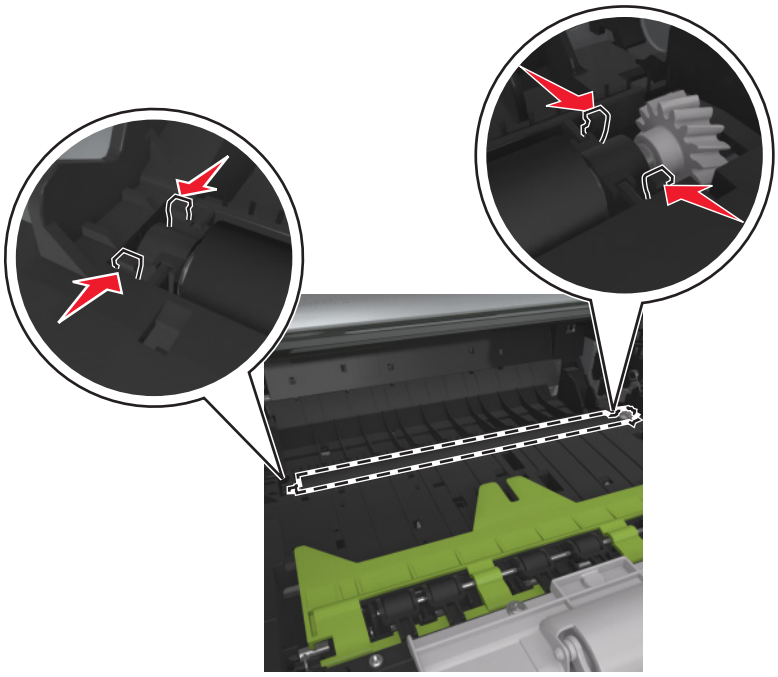

2 Lift to remove the transfer roll.

Warning—Potential Damage: Do not remove the spring under the left latch. Doing so will damage the printer.

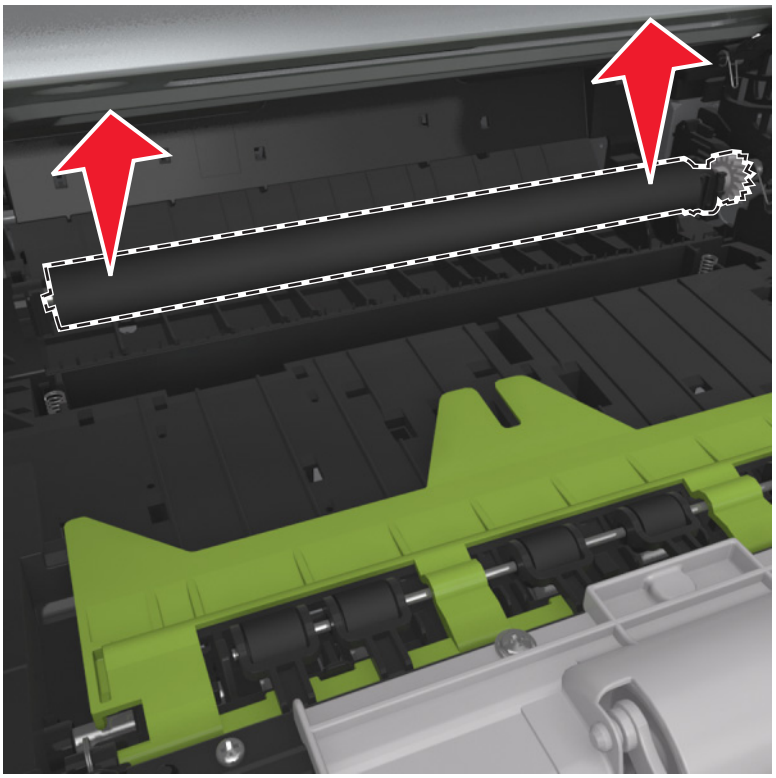

Cartridge plunger removal

1 Open the front door.

2 Tilt the cartridge plunger.

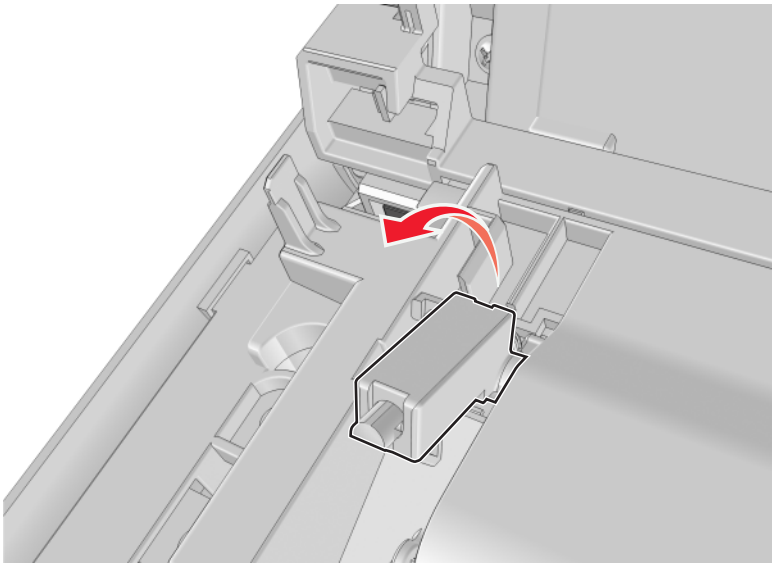

3 Twist and then remove the cartridge plunger.

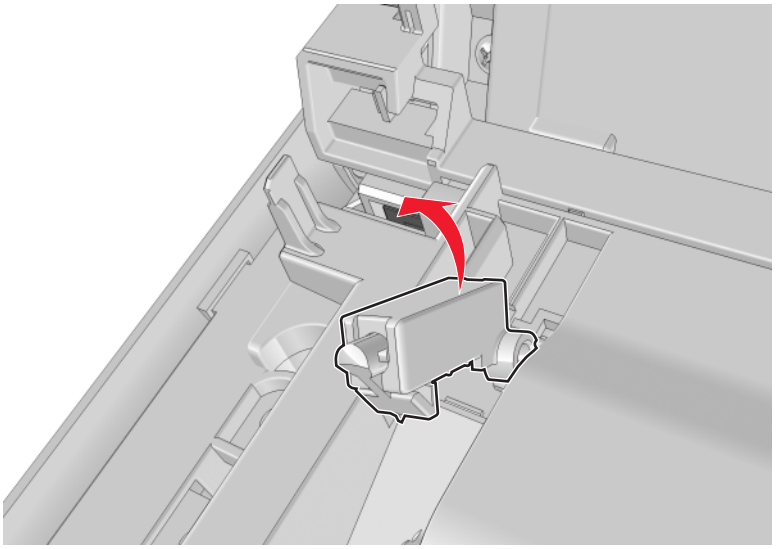

Installation notes:

a Use a spring hook to hold the spring, and then reinstall the cartridge plunger.

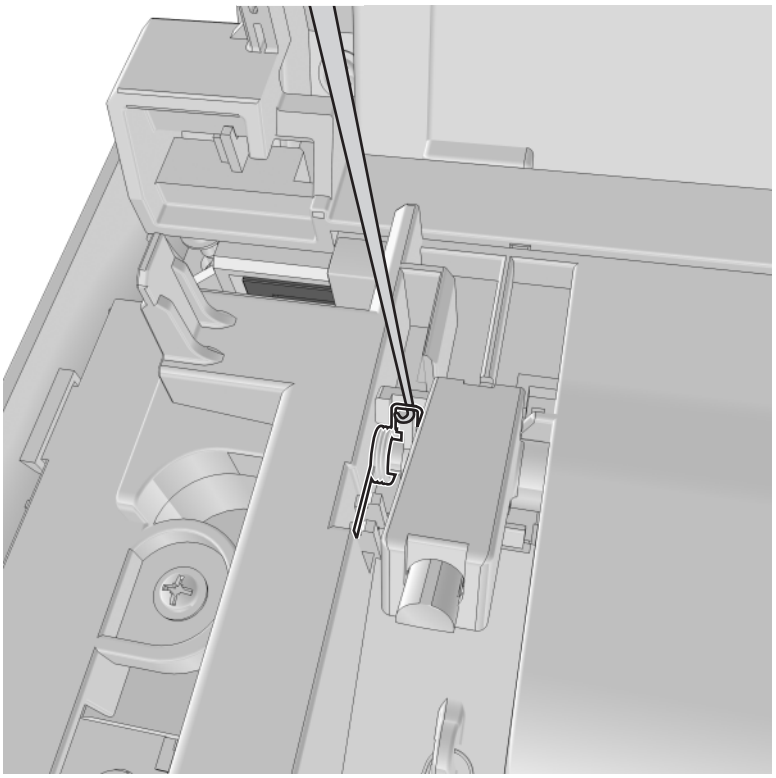

b Set the spring over the plunger.

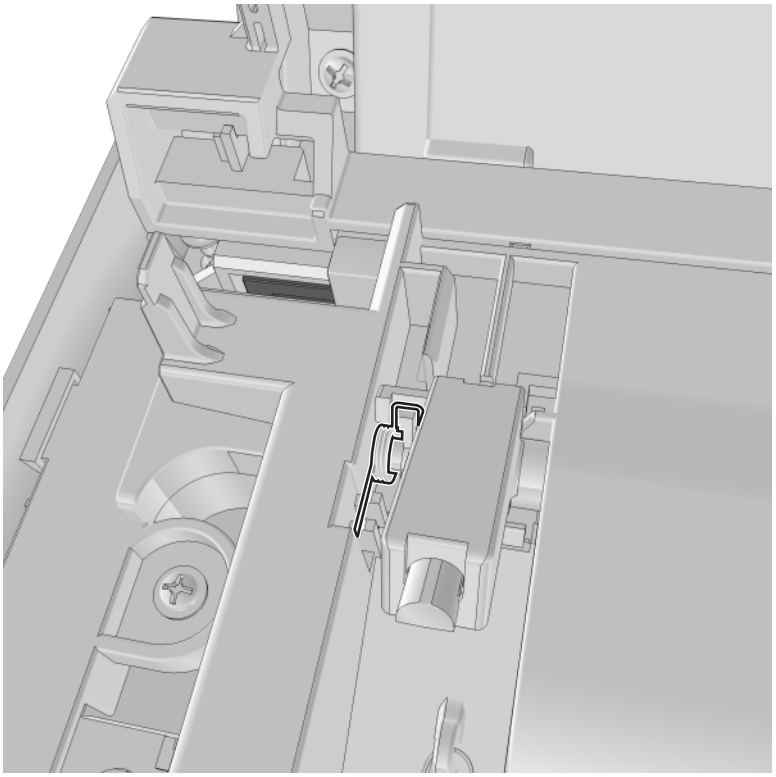

Name plate cover removal

1 Open the front door.

2 Remove the two screws (A) securing the right side of the name plate cover.

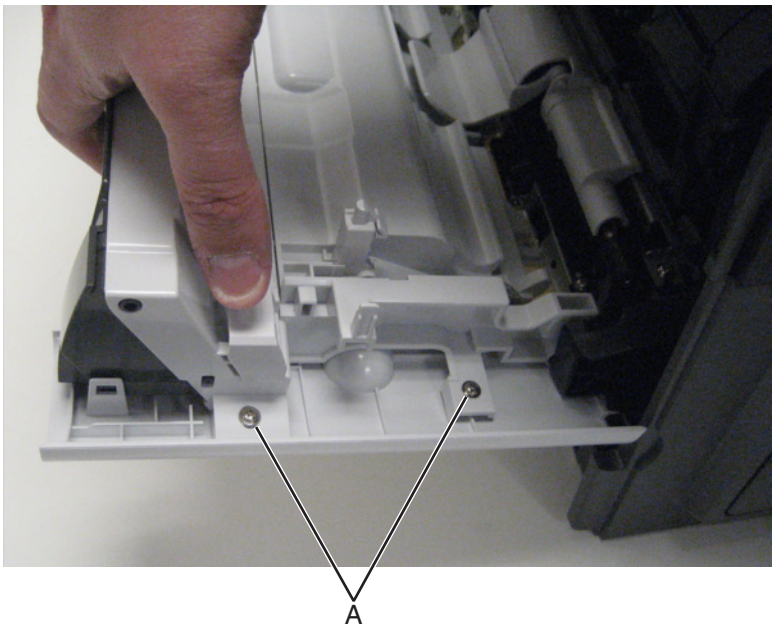

3 Remove the two screws (B) securing the left side of the name plate cover.

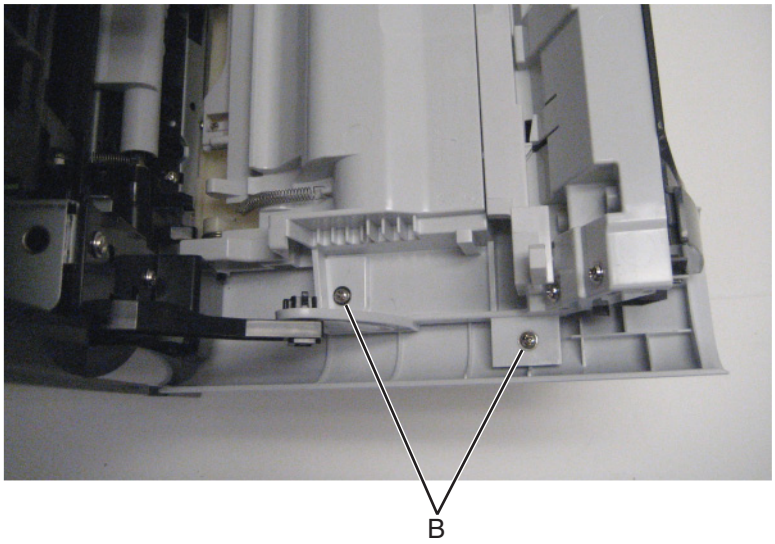

4 Release the tabs on top of the cover, and then remove the name plate cover.

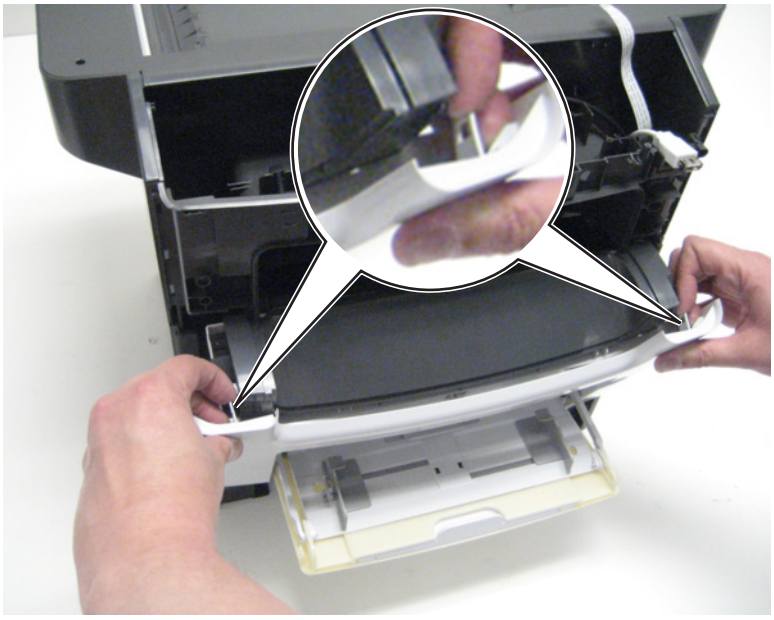

Front bin cover removal

1 Remove the name plate cover. See **“Name plate cover removal” on page 246**.

2 Remove the two screws (A) securing the front bin cover to the front access cover.

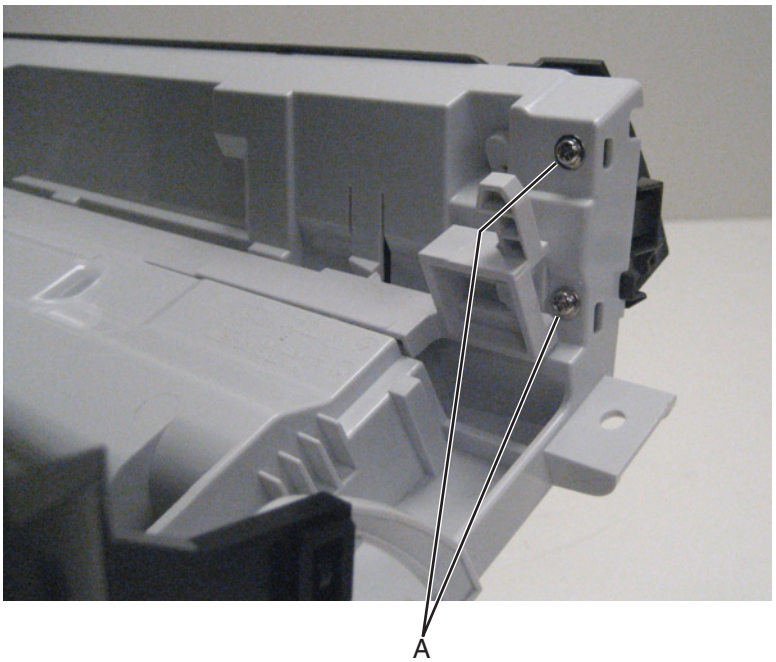

3 Lift the left side of the cover, and then remove the front bin cover.

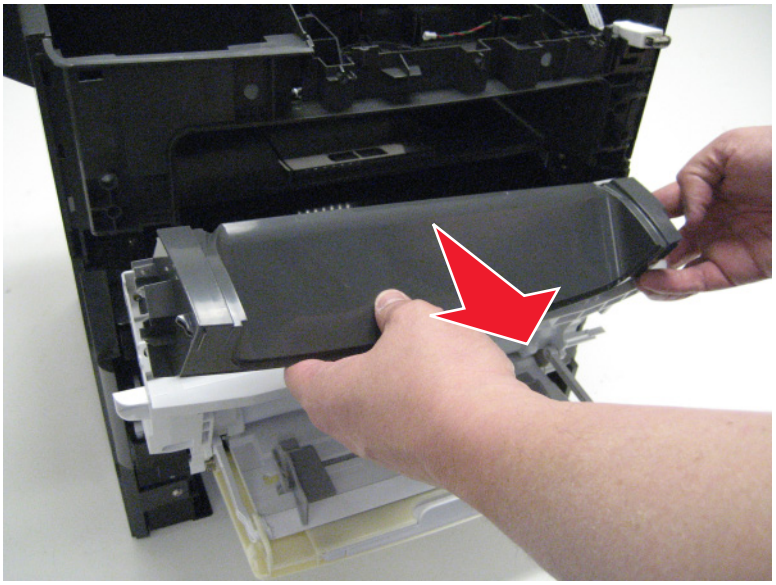

Control panel assembly removal

1 Remove the scanner front cover. See **"Scanner front cover removal" on page 315**.

2 Remove the three screws (A) from the control panel assembly.

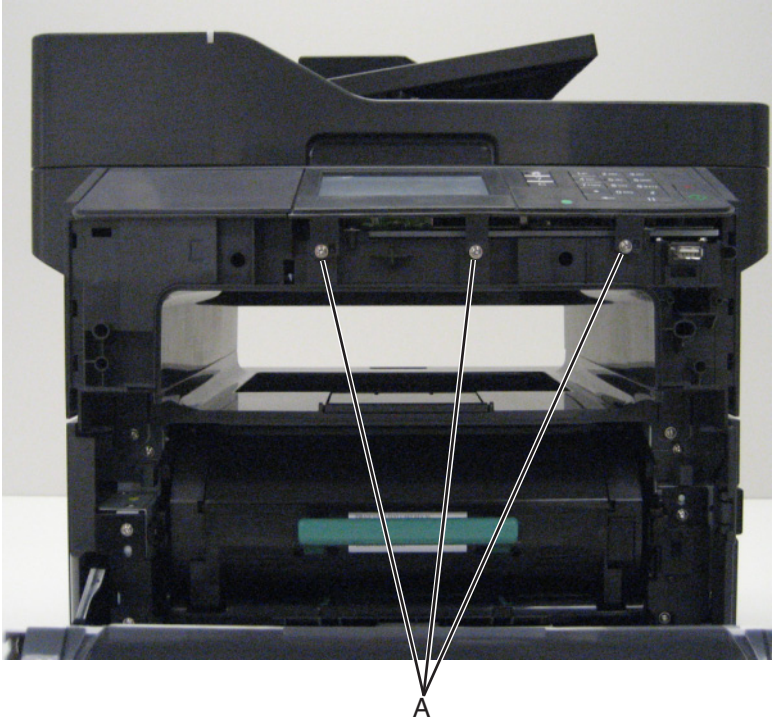

3 Open the control panel cover.

4 Lift the control panel to access the UICC underneath.

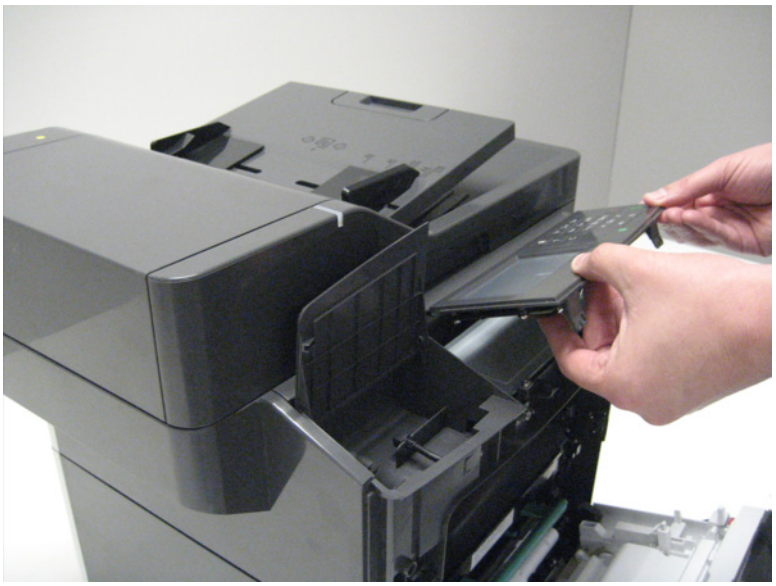

5 Disconnect the cave LED cable from the controller card.

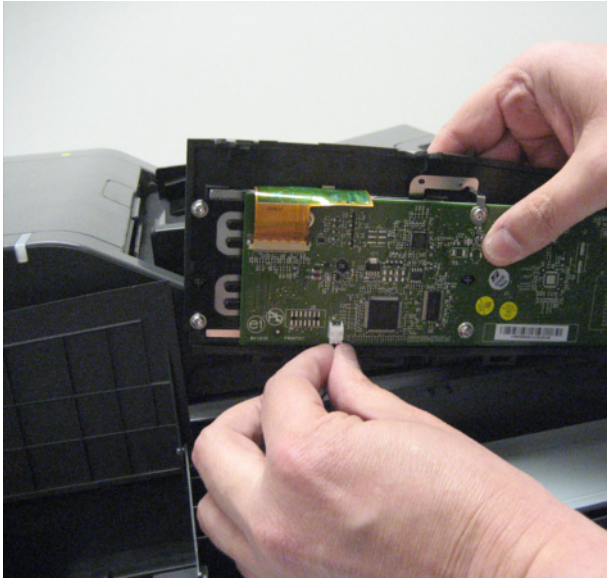

6 Remove the screw (B) to release the toroid holder, and then slide the toroid holder away from the UICC connector.

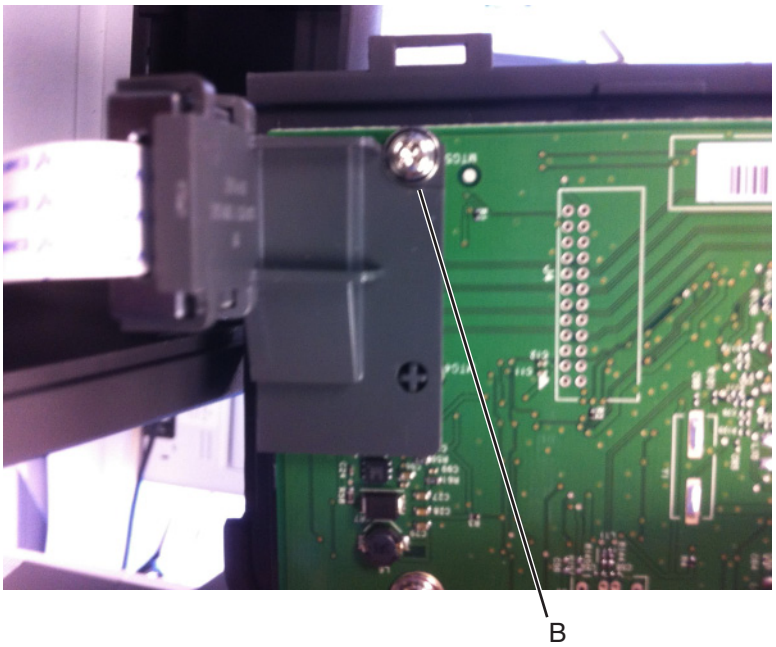

7 Disconnect the UICC cable from the controller card, and then remove the control panel assembly.

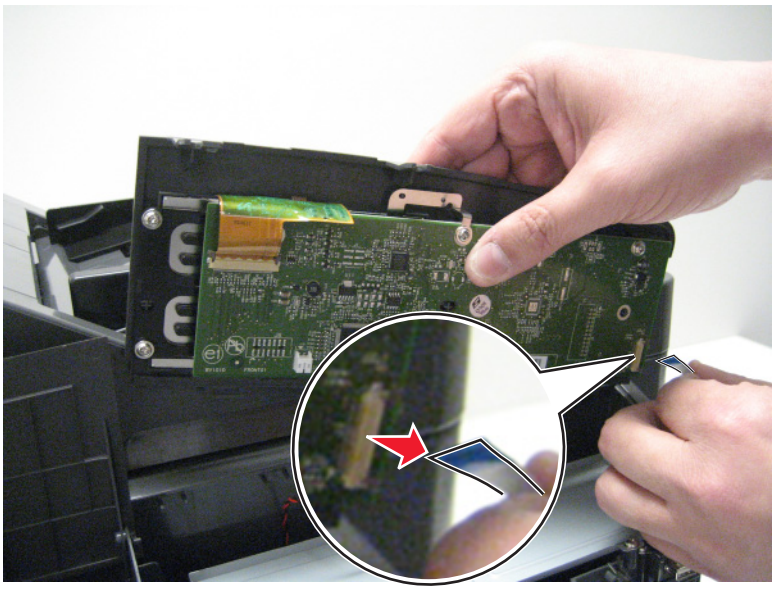

UICC removal

1 Remove the control panel assembly. See **“Control panel assembly removal” on page 249**.

2 Disconnect the video cable (A) from the UICC.

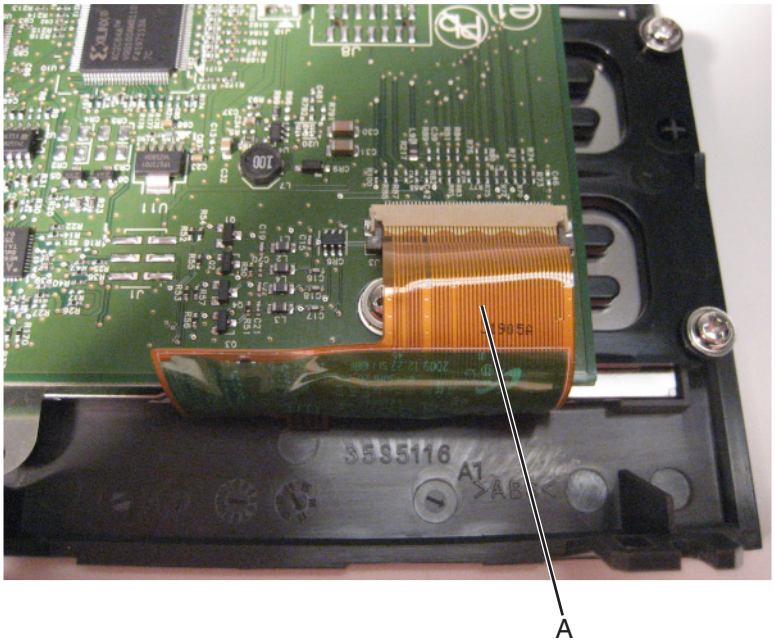

3 Remove the five screws, and then remove the UICC.

UICC (MX310) removal

1 Remove the control panel assembly. See **“Control panel assembly removal” on page 249**.

2 Place the control panel assembly facedown on a non-marring surface.

3 Remove the five screws (A) from the UICC.

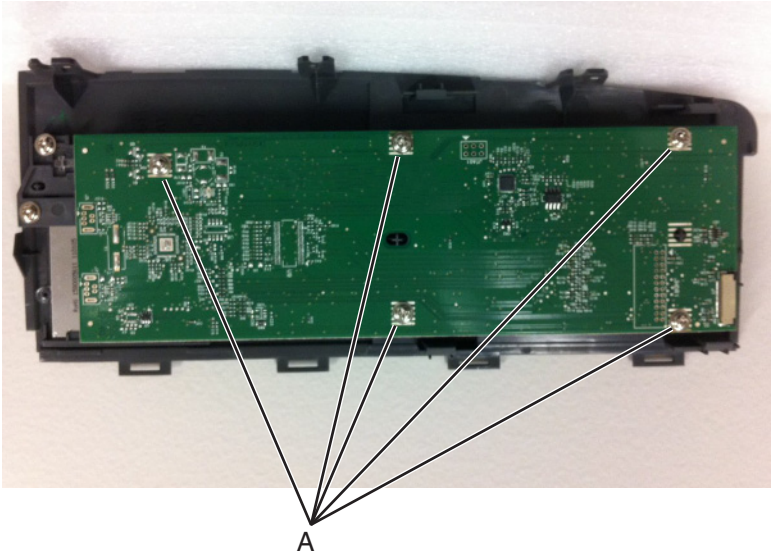

4 Disconnect the display video cables, and remove the UICC.

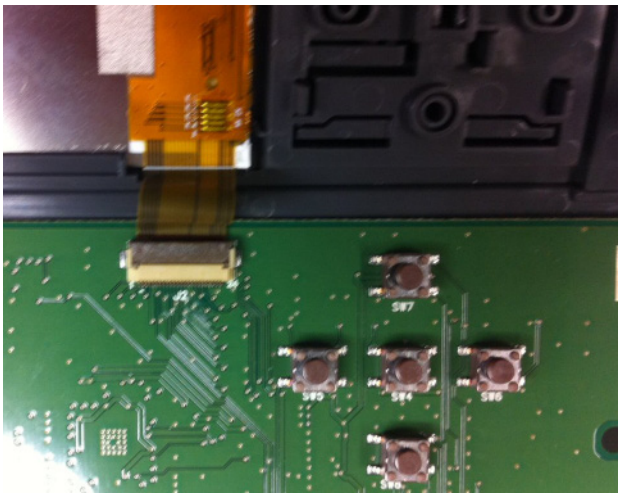

UICC shield removal

Note: This is not a FRU.

Remove the three screws (A), and then remove the UICC shield.

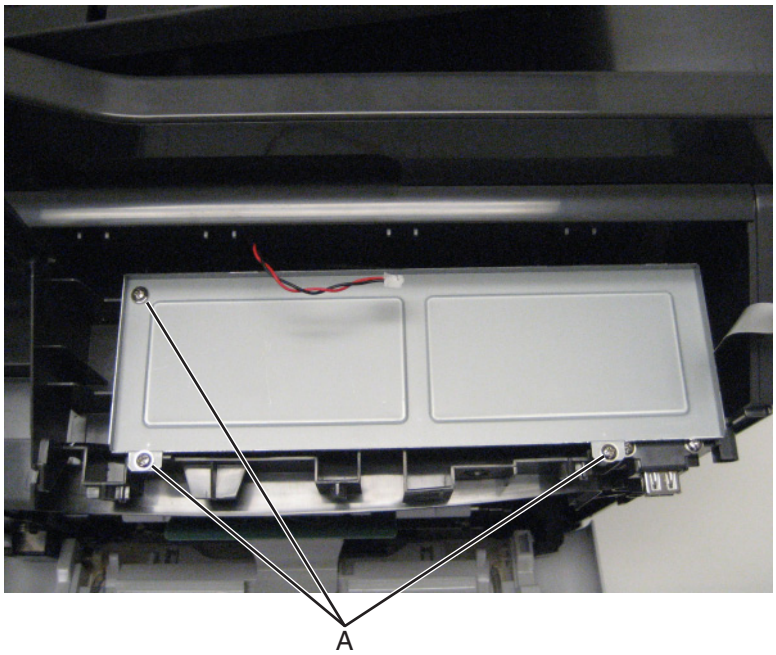

USB cable bracket removal

1 Remove the UICC shield. See **“UICC shield removal” on page 253**.

2 Remove the two screws (A), and then remove the USB cable bracket.

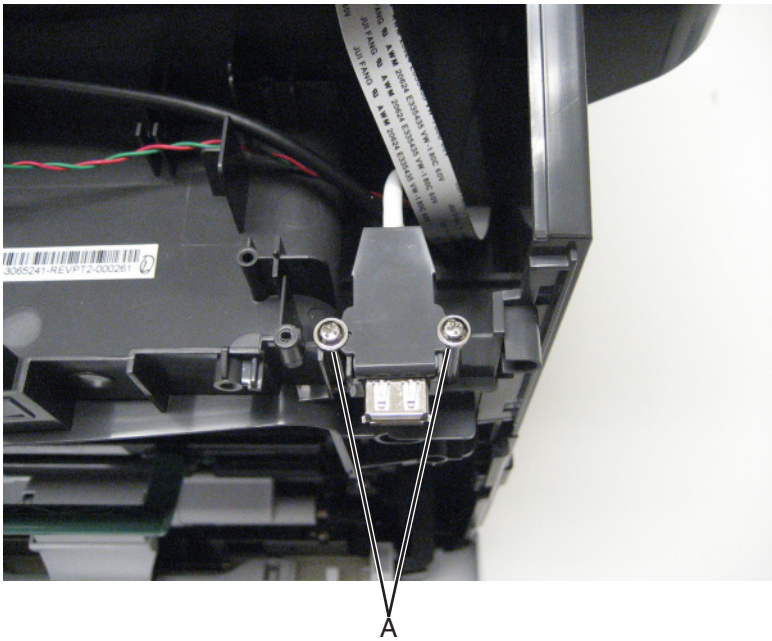

3 Remove the USB cable bracket.

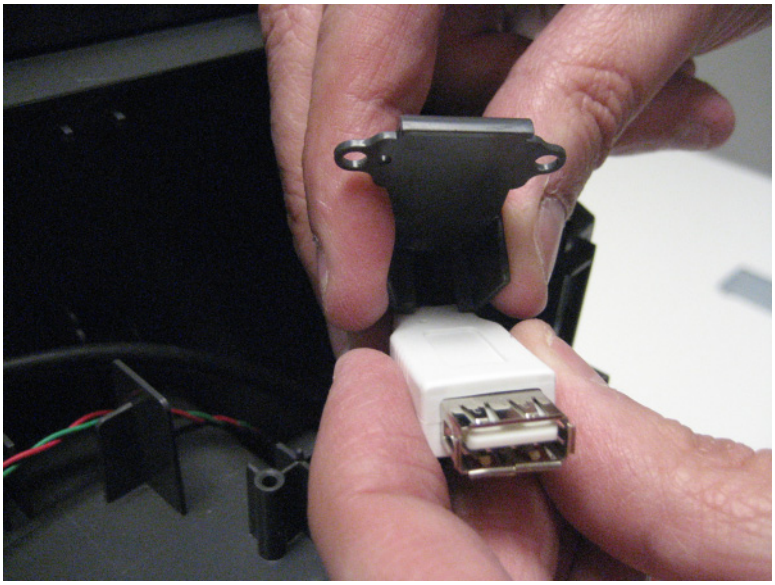

Speaker removal

1 Remove the control panel assembly. See **“Control panel assembly removal” on page 249**.

2 Remove the UICC shield. See **“UICC shield removal” on page 253**.

3 Disconnect the speaker cable (A).

4 Remove the screw (B) fastening the speaker to the scanner assembly.

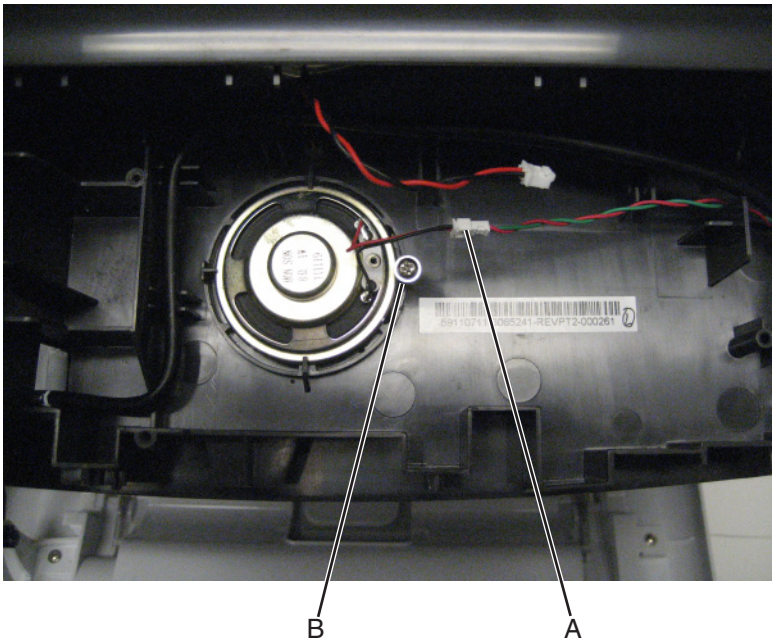

5 Slide the speaker off the scanner assembly.

Control panel cover removal

1 Flex the frame to the right to release the hinge of the cover.

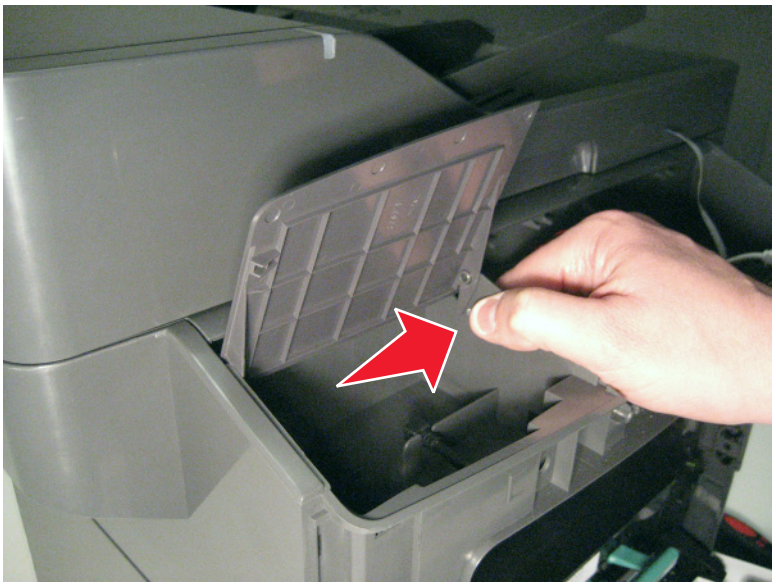

2 Remove the control panel cover.

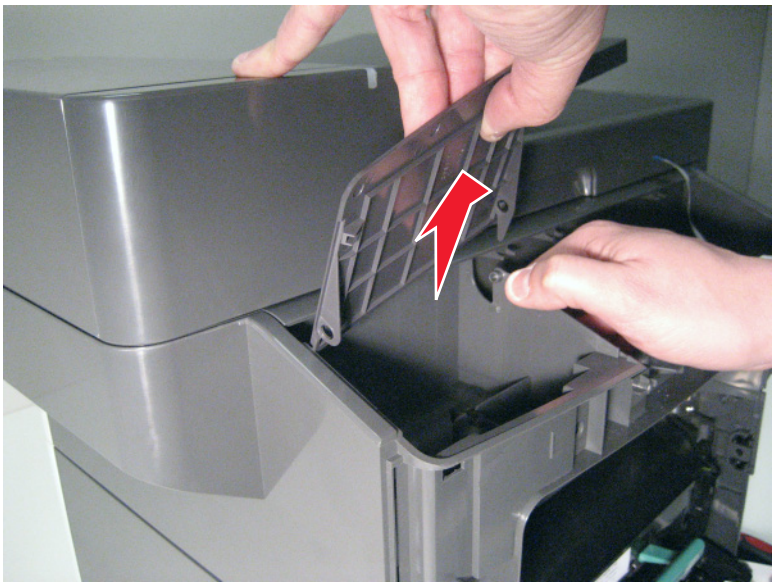

Display removal (MX410, MX51x)

1 Remove the control panel assembly. See **“Control panel assembly removal” on page 249**.

2 Remove the UICC. See **“UICC removal” on page 252**.

3 Remove the four screws (A) securing the bracket to the keypad assembly.

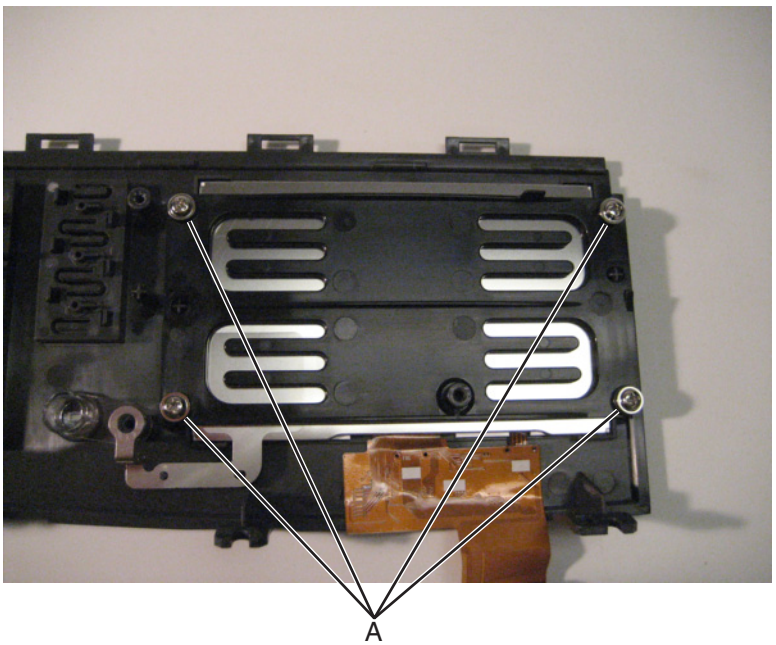

4 Remove the ground shield.

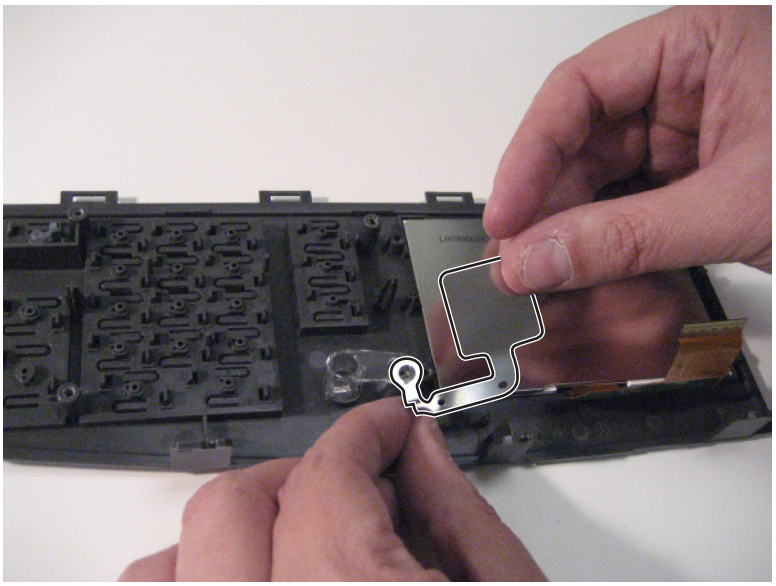

5 Remove the display.

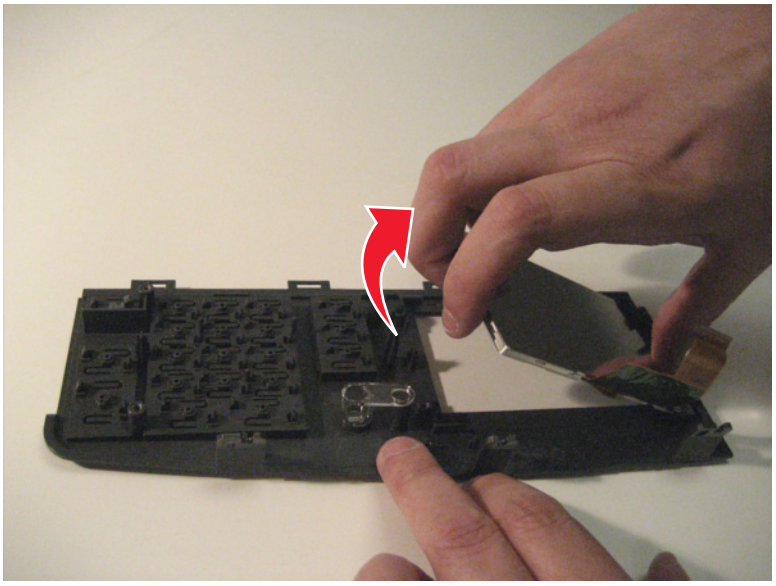

Display (MX310) removal

1 Remove the UICC. See **"UICC (MX310) removal" on page 252**.

2 Remove the three screws (A) securing the display bracket to the control panel.

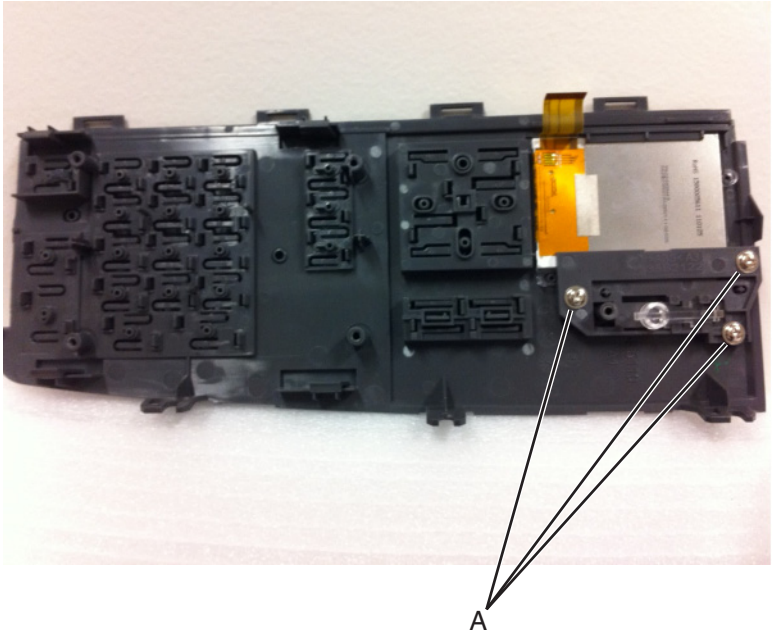

3 Slide the display off the LCD cover.

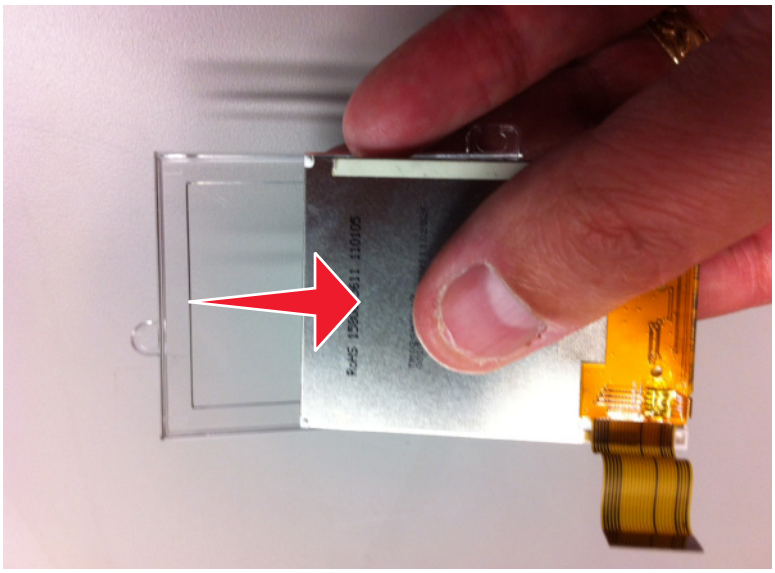

Light tube removal

1 Remove the control panel assembly. See **"Control panel assembly removal" on page 249**.

2 Remove the UICC. See **"UICC removal" on page 252**.

3 Remove the four screws (A) securing the bracket to the keypad assembly.

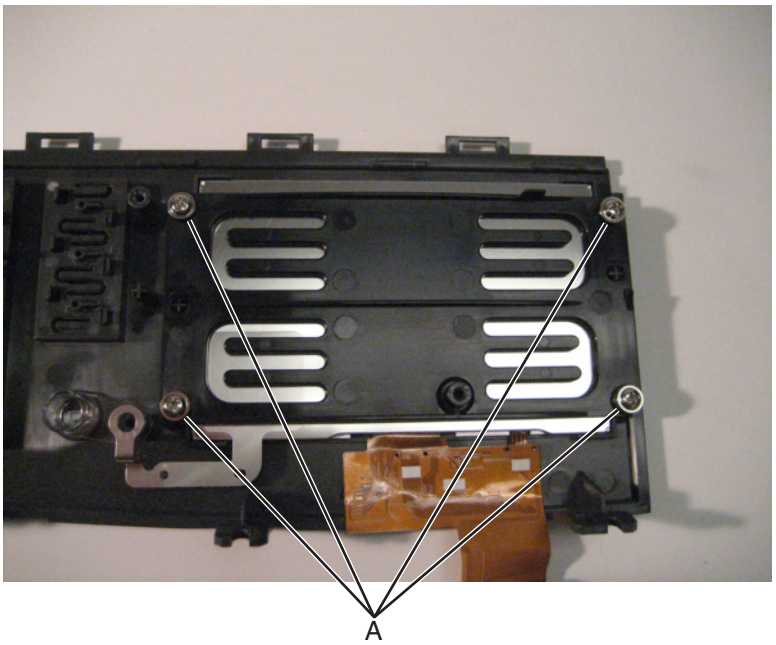

4 Remove the ground shield.

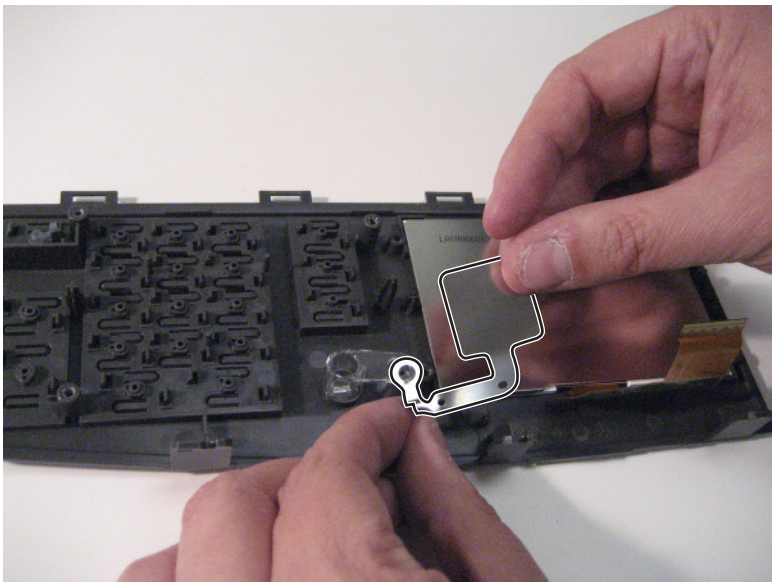

5 Remove the light tube (B).

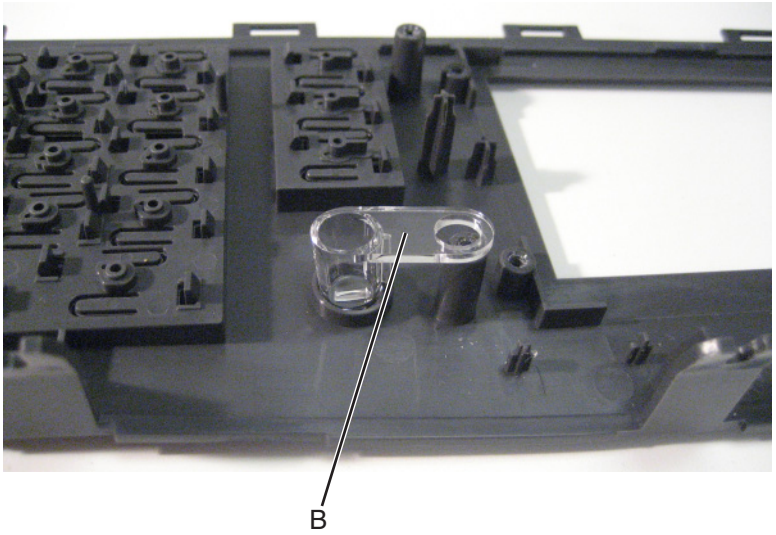

Keypad assembly removal

1 Remove the control panel assembly. See **“Control panel assembly removal” on page 249**.

2 Remove the UICC. See **“UICC removal” on page 252**.

3 Remove the display. See **“Display removal (MX410, MX51x)” on page 256**.

4 Remove the light tube. The keypad assembly remains.

MPF tray removal

1 Remove the front access cover. See **“Front access cover removal” on page 265**.

2 Using a spring hook, remove the two springs from the front access cover.

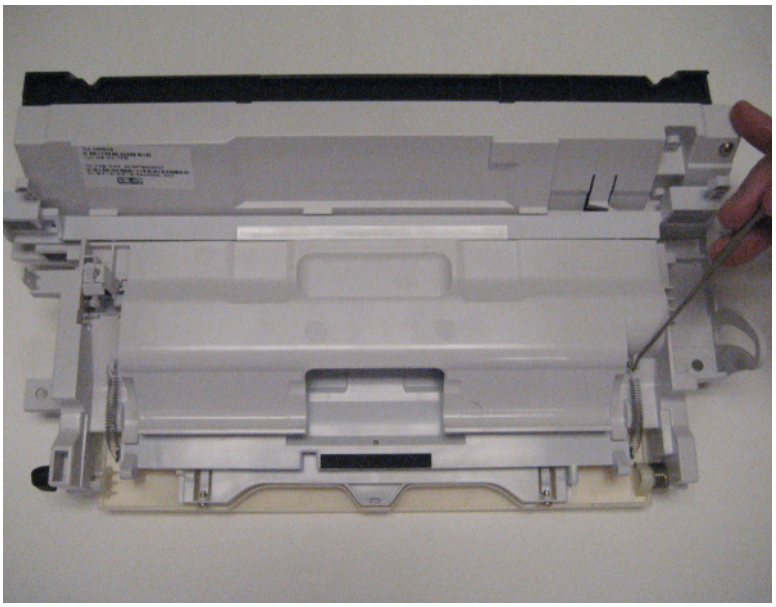

3 Disconnect the left and right MPF links from the front access cover.

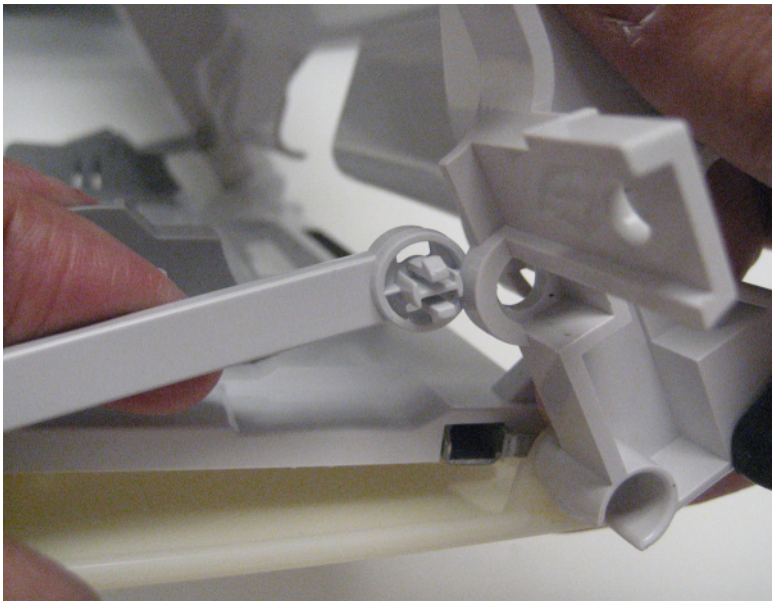

4 Push the MPF tray to the left to release the right pivot on the front access cover.

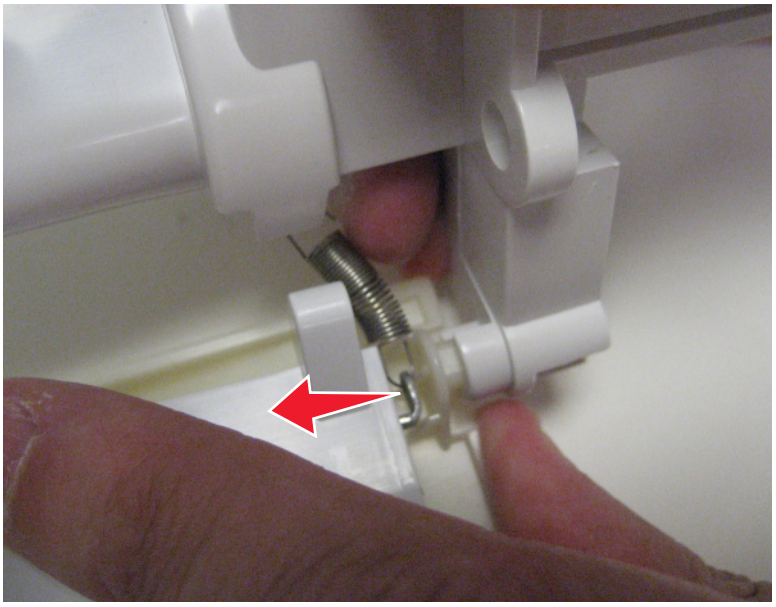

5 Slide the tray to the right, and remove the MPF tray and spring.

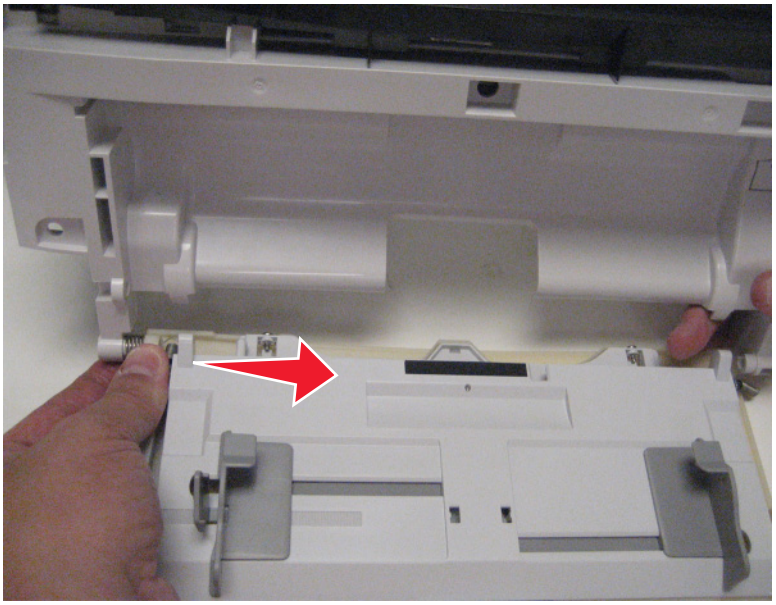

Installation note: Insert the straight end of the spring into the hole on the front access cover before sliding the MPF tray onto the left pivot of the front access cover.

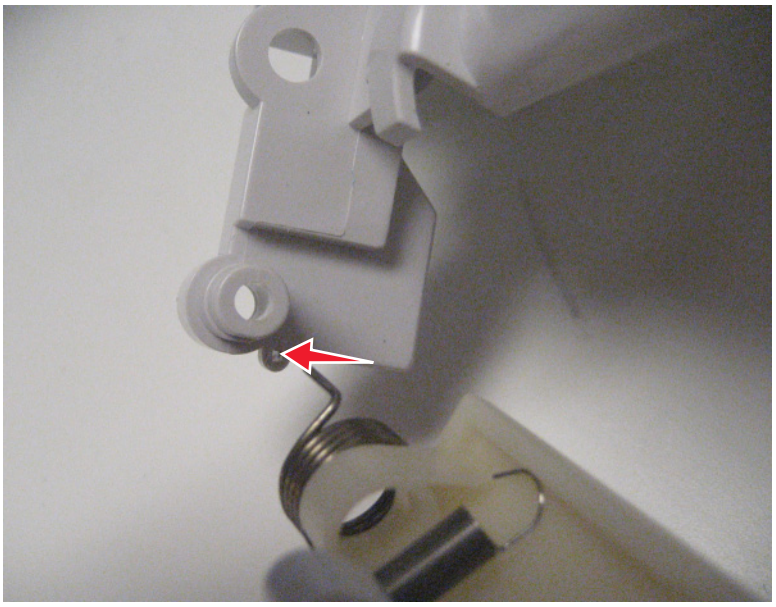

MPF pick roller cover removal

1 Open the front door.

2 Remove the two screws (A), and then remove the MPF pick roller cover.

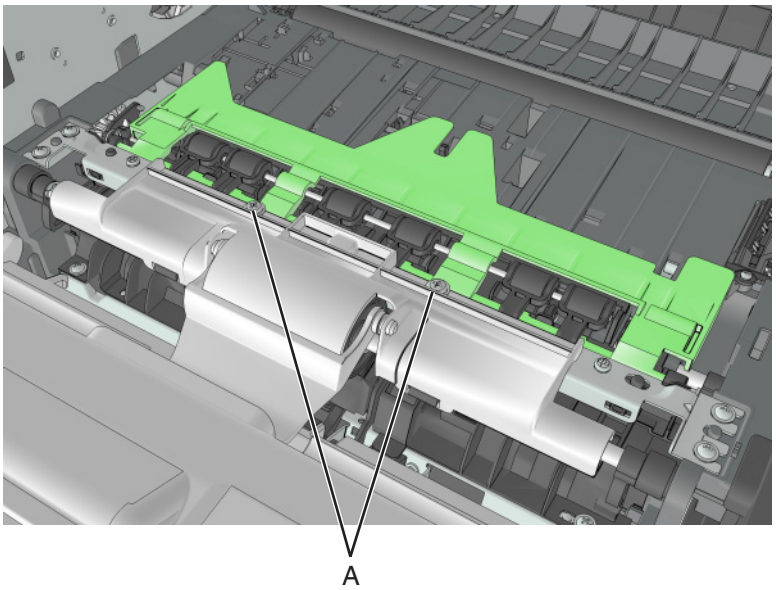

MPF pick roller removal

1 Remove the MPF pick roller cover. See **"MPF pick roller cover removal" on page 263**.

2 Remove the two screws (A).

Note: Use a #1 Phillips screwdriver.

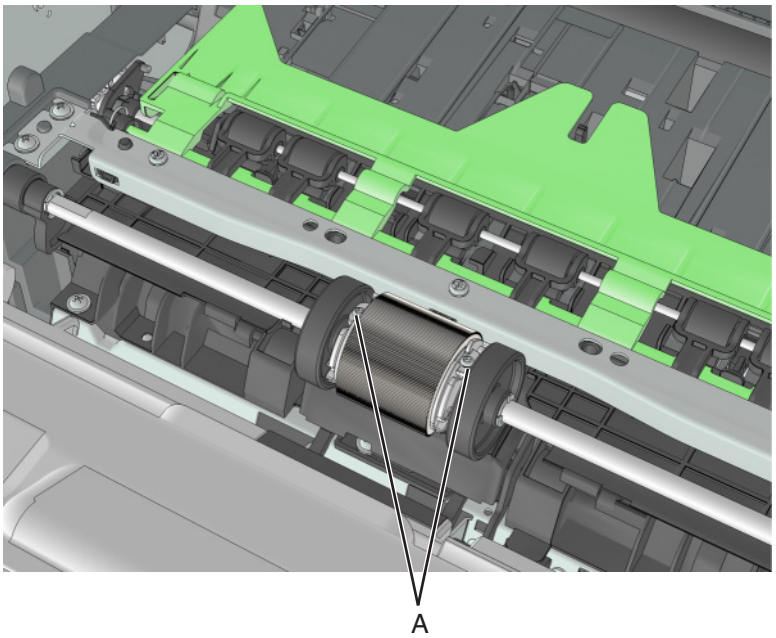

3 Pull the MPF pick roller outward to remove.

Warning—Potential Damage: Do not touch the pick tire with bare hands, as this can damage the pick roller.

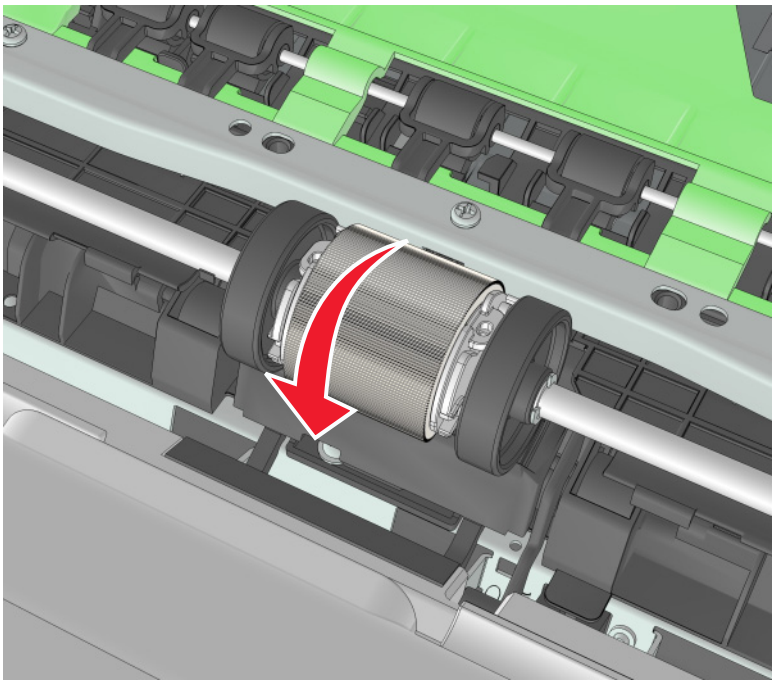

Bail removal

1 Remove the MPF pick roller cover. See **"MPF pick roller cover removal" on page 263**.

2 Rotate the bail.

3 Squeeze the latches, and then remove the bail.

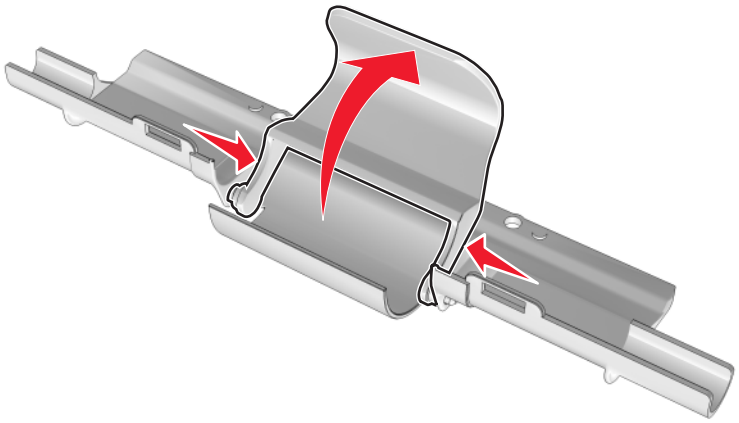

Jam access cover removal

1 Remove the MPF pick roller cover. See **"MPF pick roller cover removal" on page 263**.

2 Remove the MPF pick roller. See **"MPF pick roller removal" on page 263**.

3 Remove the four screws (A), and then remove the jam access cover.

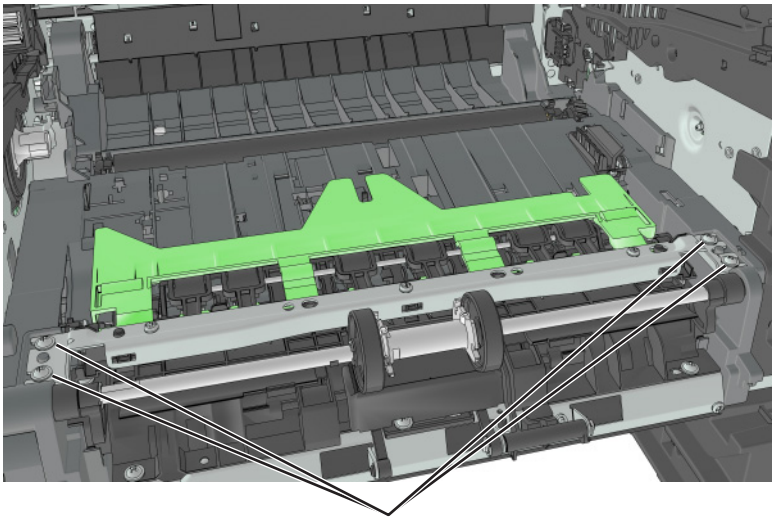

Front access cover removal

1 Remove the name plate cover. See **“Name plate cover removal” on page 246**.

2 Disconnect the cartridge gear linkage (A) from the front access cover.

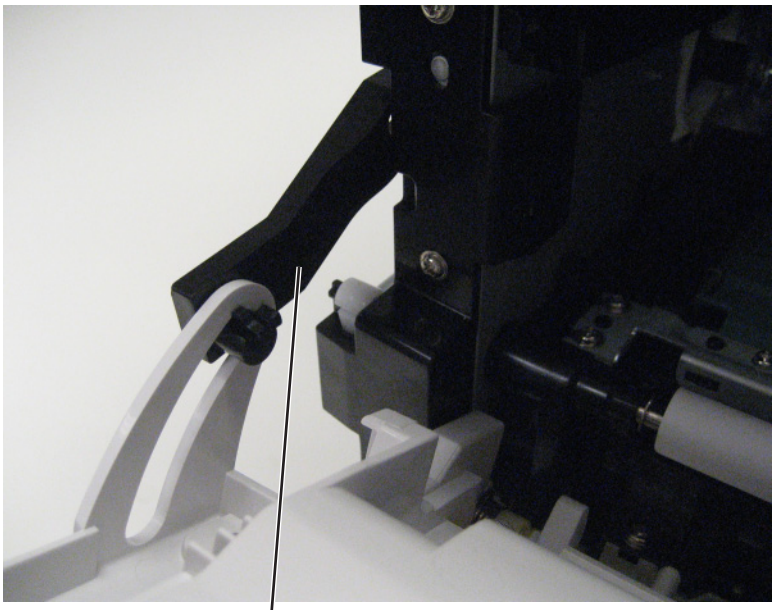

3 Rotate the front access cover to a position that aligns the gap on the cover with the right hinge.

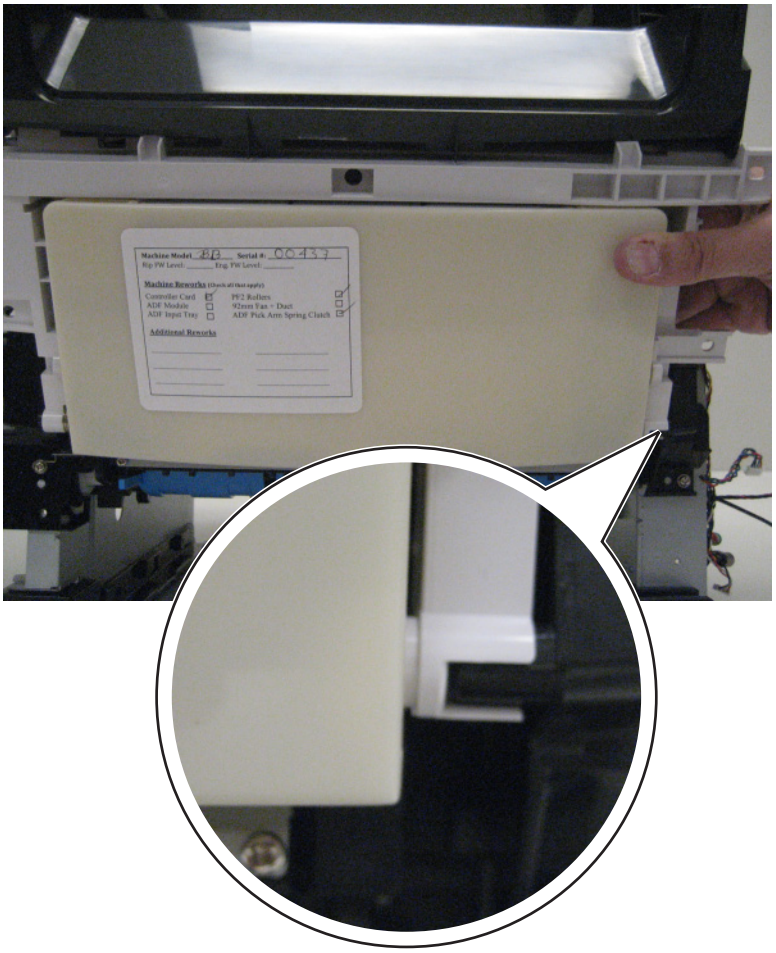

4 Release the right hinge off the pivot by lifting up on the right side of the front access cover.

5 Slide the front access cover to the right, removing it from the print engine.

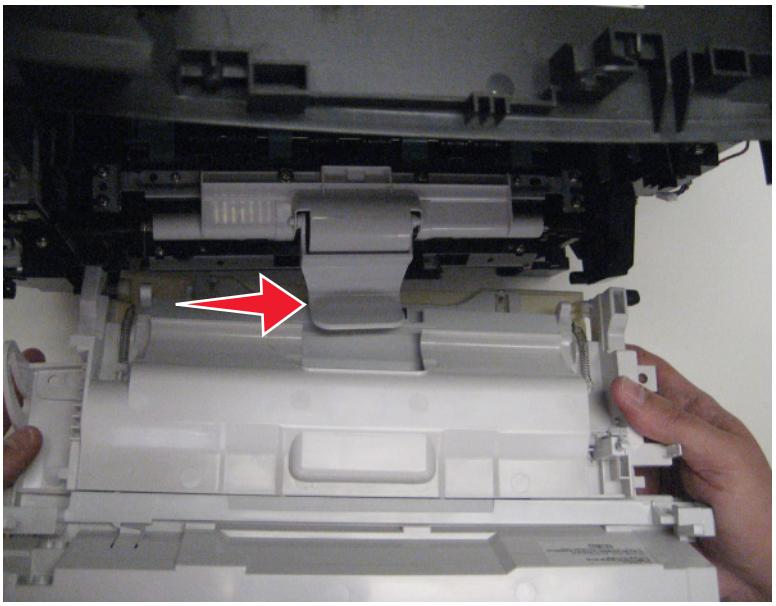

Front door sensor removal

1 Remove the front access cover. See **“Front access cover removal” on page 265**.

2 From under the right mount, remove the screw (A).

Note: Use a #1 Phillips screwdriver.

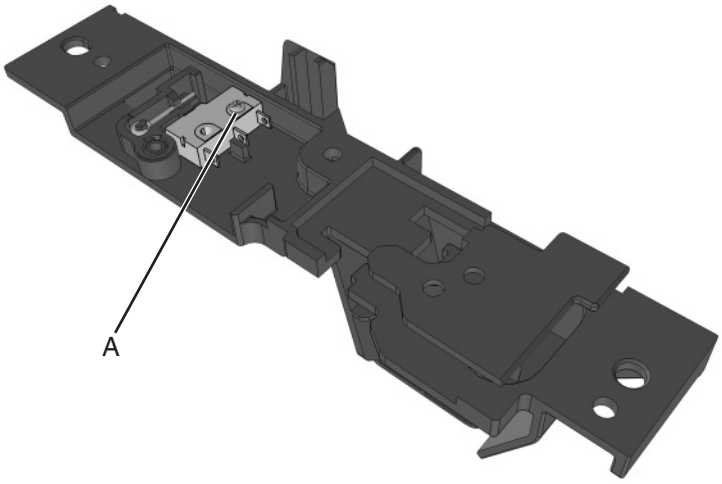

Front input guide removal

1 Remove the right cover. See **“Right cover removal” on page 226**.

2 Remove the MPF pick roller cover. See **“MPF pick roller cover removal” on page 263**.

3 Remove the MPF pick roller. See **“MPF pick roller removal” on page 263**.

4 Remove the jam access cover. See **“Jam access cover removal” on page 264**.

5 Remove the MPF tray. See **“MPF tray removal” on page 260**.

6 Disconnect cable JMPF1 from the controller board.

7 Remove the four screws (A).

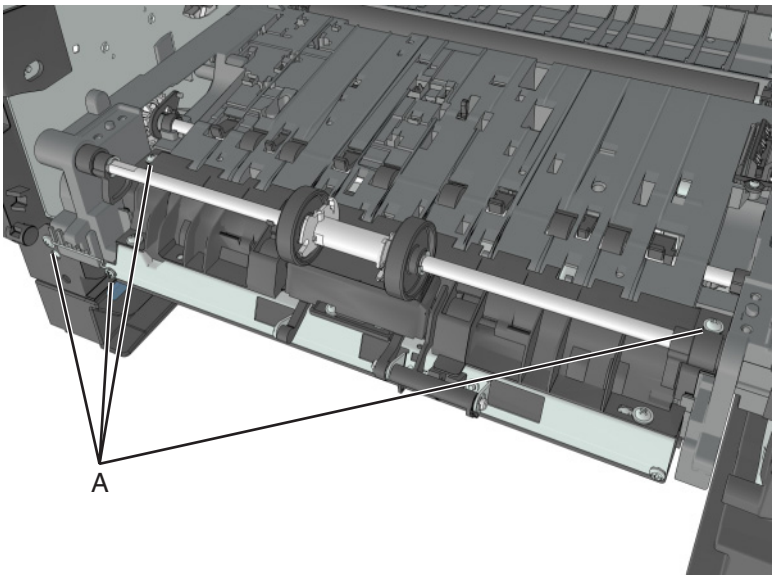

8 Push and hold the cam restraint to release the MPF shaft.

9 Rotate the MPF shaft inward so that the cams at each end point up.

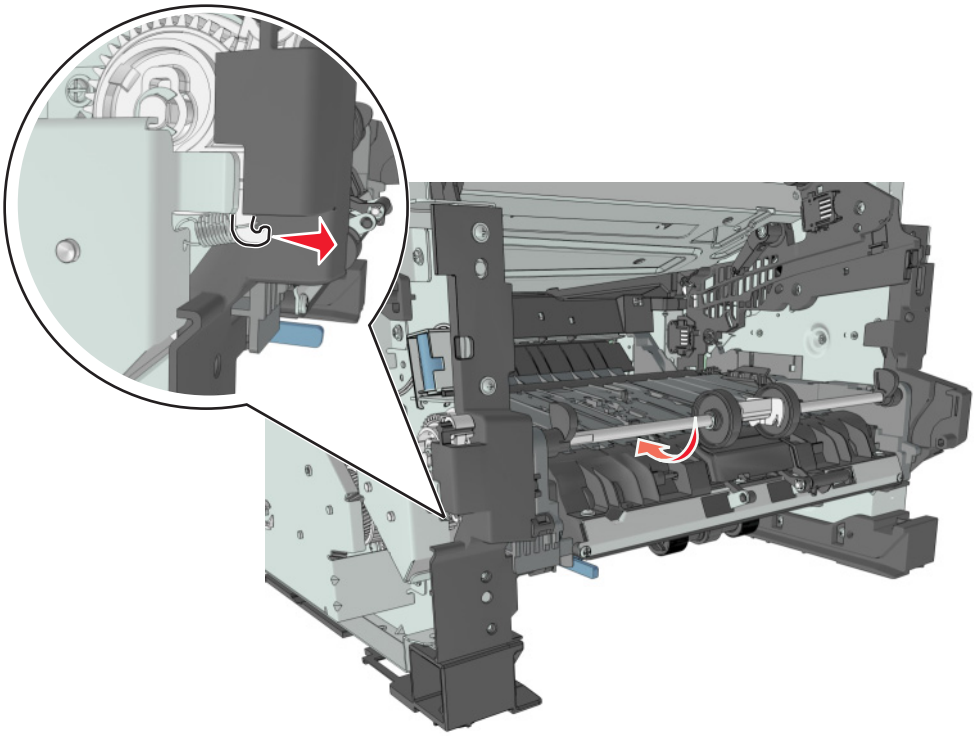

10 Release the front guide from the guides at each end.

Installation note: The cams at each end of the MPF shaft must point down.

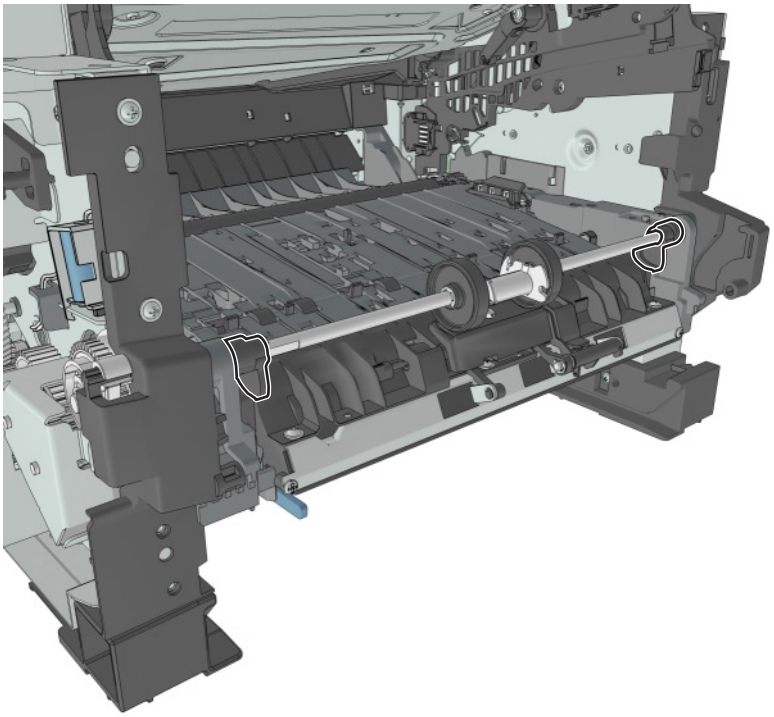

Separator pad removal

1 Remove the right cover. See **“Right cover removal” on page 226**.

2 Remove the front access cover. See **“Front access cover removal” on page 265**.

3 Remove the MPF pick roller cover. See **“MPF pick roller cover removal” on page 263**.

4 Remove the MPF pick roller. See **“MPF pick roller removal” on page 263**.

5 Remove the jam access cover. See **“Jam access cover removal” on page 264**.

6 Remove the E-clip (A).

7 While pressing down the MPF sensor flag (B) and separator pad (C), move the restraint roller (D) and MPF pick roller hub (E) to the right.

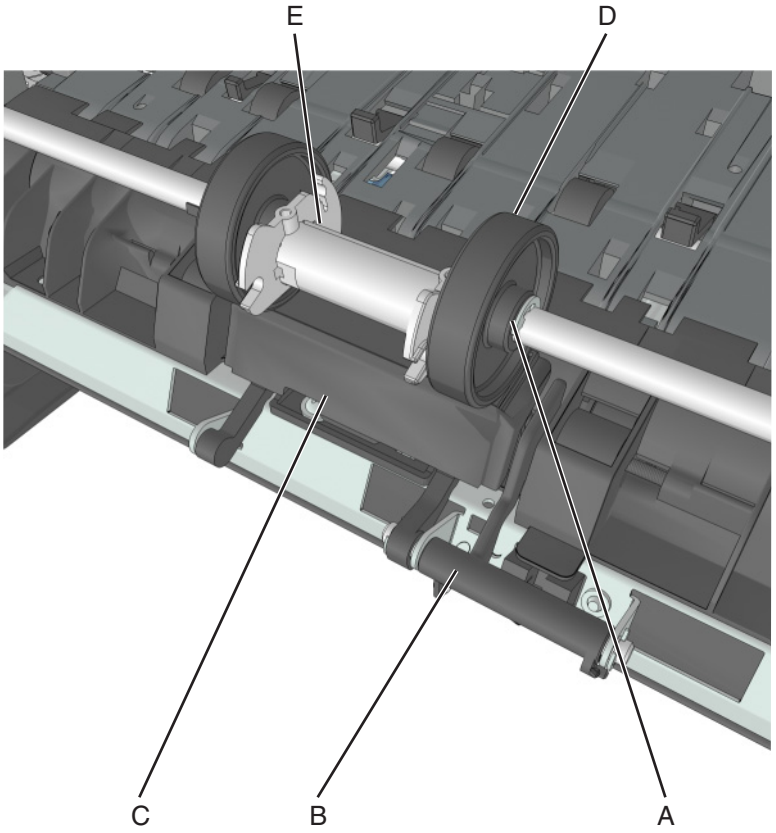

8 Remove the pin (F).

9 While pressing down the MPF sensor flag and separator pad, move the restraint roller (G) to the right.

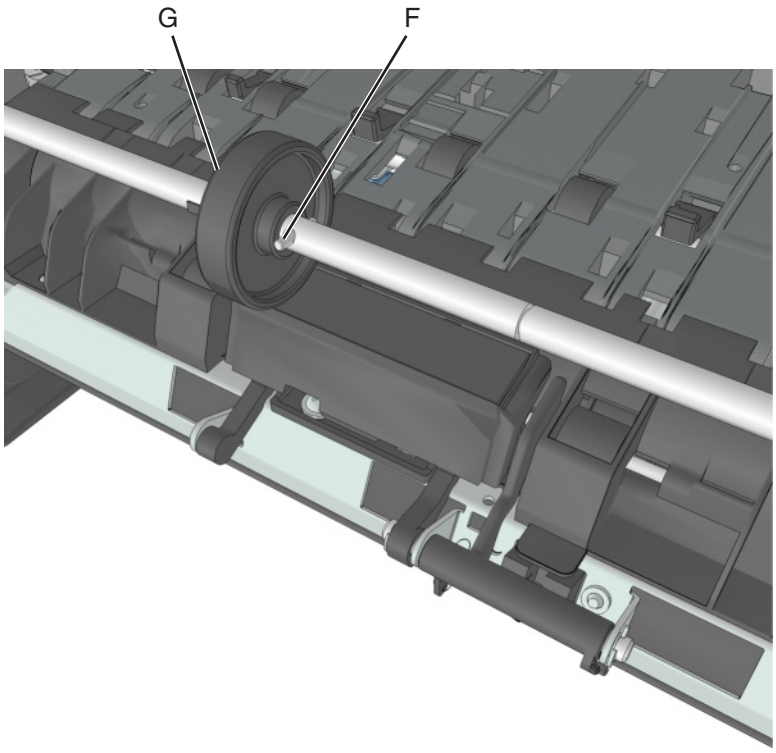

10 Remove the E-clip (H), and then move the shaft (I) to the right.

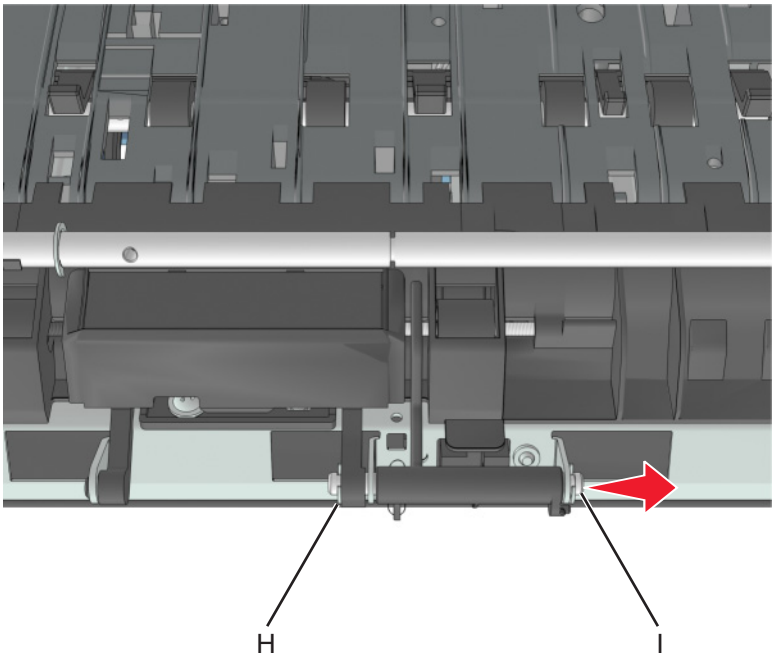

11 Remove the separator pad and the spring underneath.

Bottom removals

Power supply removal

1 Remove the left cover. See **“Left cover removal” on page 209**.

2 Remove the rear door and cover. See **“Rear exit door removal” on page 301** and **“Rear cover removal” on page 302**.

3 Disconnect the fuser cable (A) from the power supply, and disconnect the cable (B) from the left side of the printer.

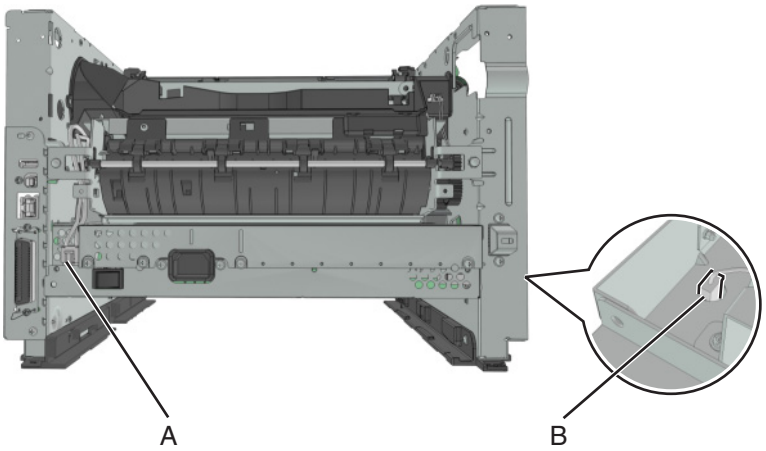

4 Position the printer so that it sits on its right side.

5 Remove the right tray guide. See **“Tray guide removal” on page 298**.

6 Remove the five metal screws (D) and the plastic screw (E) securing the power supply.

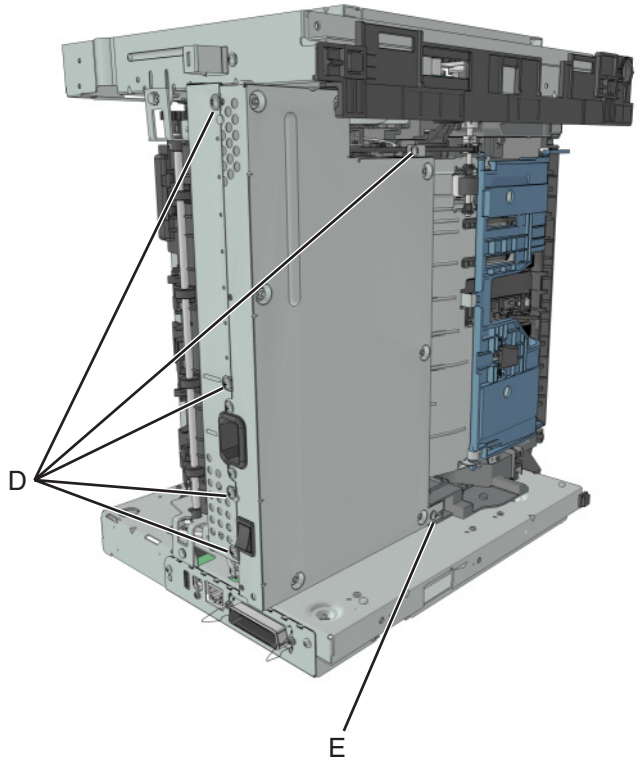

7 Remove the power supply, and then disconnect the cable from the power supply.

Power supply shield removal

1 Remove the left cover. See **“Left cover removal” on page 209**.

2 Remove the rear door and cover. See **“Rear exit door removal” on page 301** and **“Rear cover removal” on page 302**.

3 Remove the power supply. See **“Power supply removal” on page 272**.

4 Position the printer so that it sits on its right side.

5 Remove the three screws (A), and then remove the power supply shield.

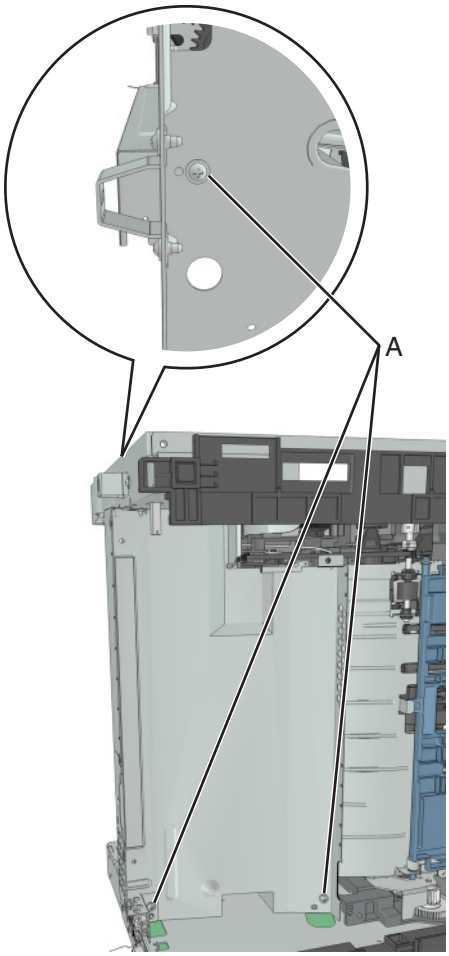

Duplex removal

1 Remove the left cover. See **“Left cover removal” on page 209**.

2 Remove the rear door and cover. See **“Rear exit door removal” on page 301** and **“Rear cover removal” on page 302**.

3 Remove the power supply. See **“Power supply removal” on page 272**.

4 Remove the power supply shield. See **“Power supply shield removal” on page 273**.

5 Position the printer so that it sits on its right side.

6 Remove the four screws (A) securing the duplex.

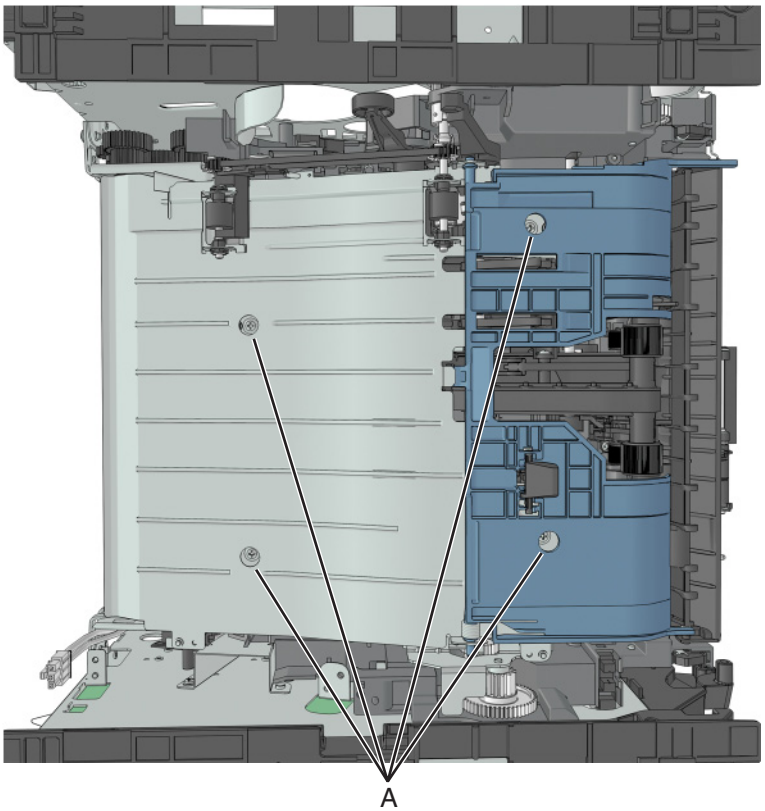

Note: The duplex link (B) is part of the FRU.

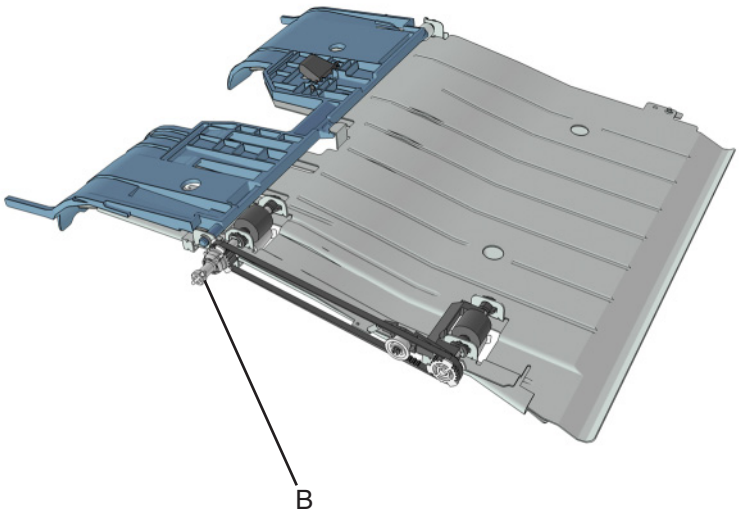

Duplex sensor and input sensor removal

1 Remove the left cover. See **"Left cover removal" on page 209**.

2 Remove the right cover. See **"Right cover removal" on page 226**.

3 Remove the rear door and cover. See **“Rear exit door removal” on page 301** and **“Rear cover removal” on page 302**.

4 Remove the power supply. See **“Power supply removal” on page 272**.

5 Remove the power supply shield. See **“Power supply shield removal” on page 273**.

6 Remove the duplex. See **“Duplex removal” on page 274**.

7 Disconnect the cable JDUPPI1 from the controller board.

8 Remove the two screws (A), and cut the cable near the frame to detach the sensors.

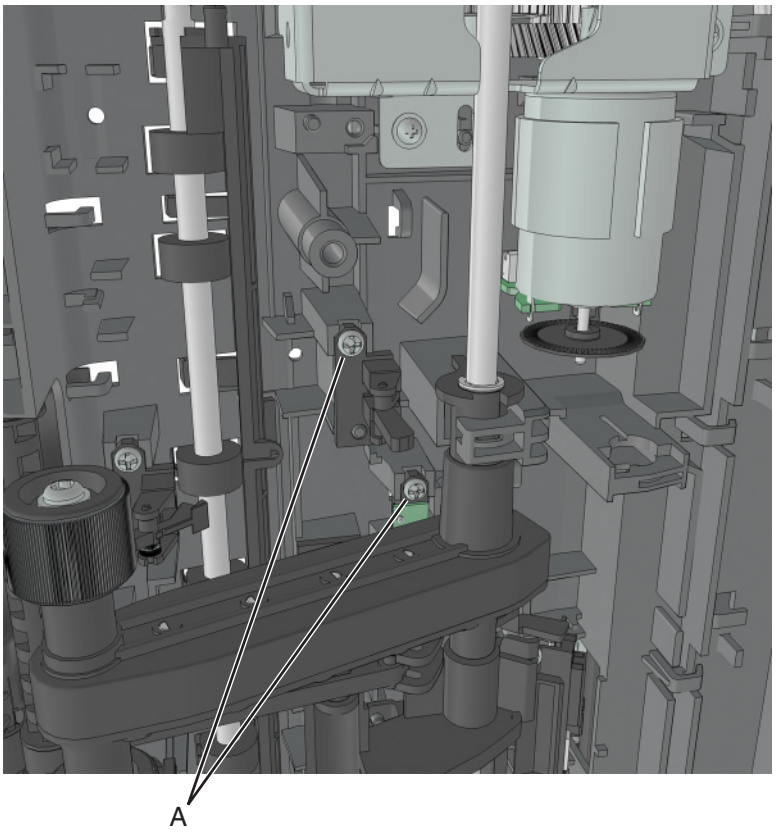

9 Remove the other half of the cable from the printer.

Installation notes:

a Install the duplex sensor, followed by the input sensor.

b Route the cable using the new path.

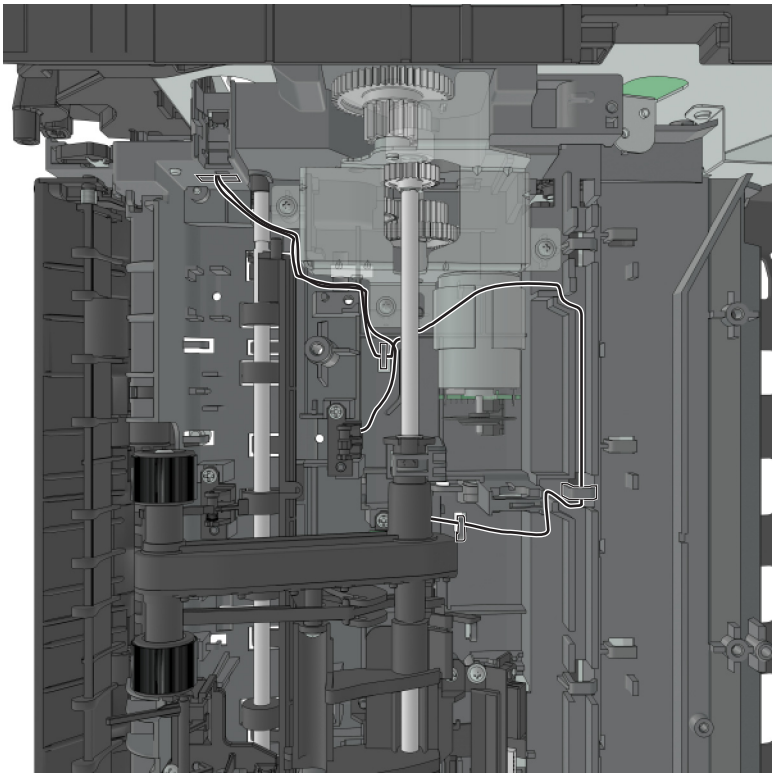

c Secure the cable near the liftplate gearbox using cable ties. Cut off any excess cable tie.

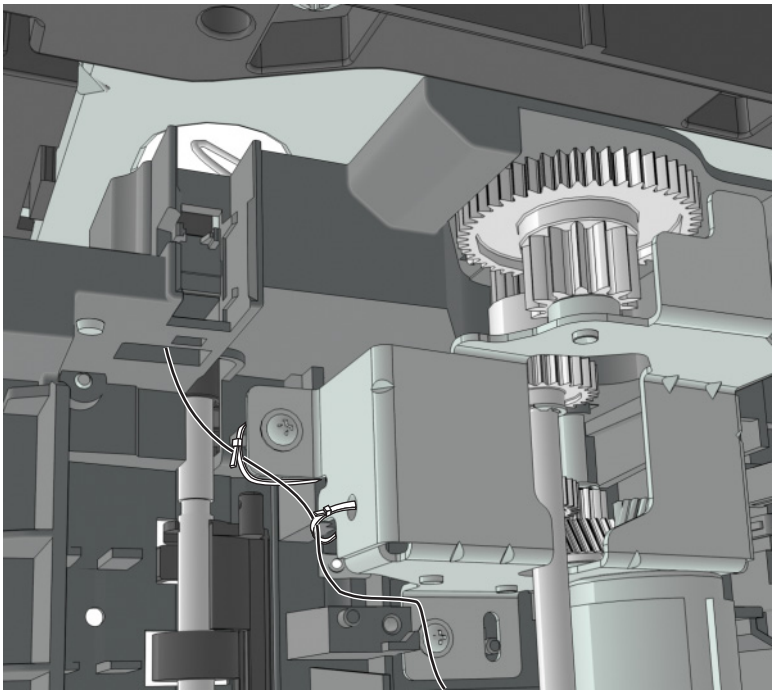

Duplex sensor and input sensor (MX310, MX410) removal

1 Remove the left cover. See **“Left cover removal” on page 209**.

2 Remove the right cover. See **“Right cover removal” on page 226**.

3 Remove the rear door and cover. See **“Rear exit door removal” on page 301** and **“Rear cover removal” on page 302**.

4 Remove the power supply. See **“Power supply removal” on page 272**.

5 Remove the power supply shield. See **“Power supply shield removal” on page 273**.

6 Remove the duplex. See **“Duplex removal” on page 274**.

7 Disconnect the cable JDUPPI 1 from the controller board.

8 Remove the two screws (A), and cut the cable near the frame to detach the sensors.

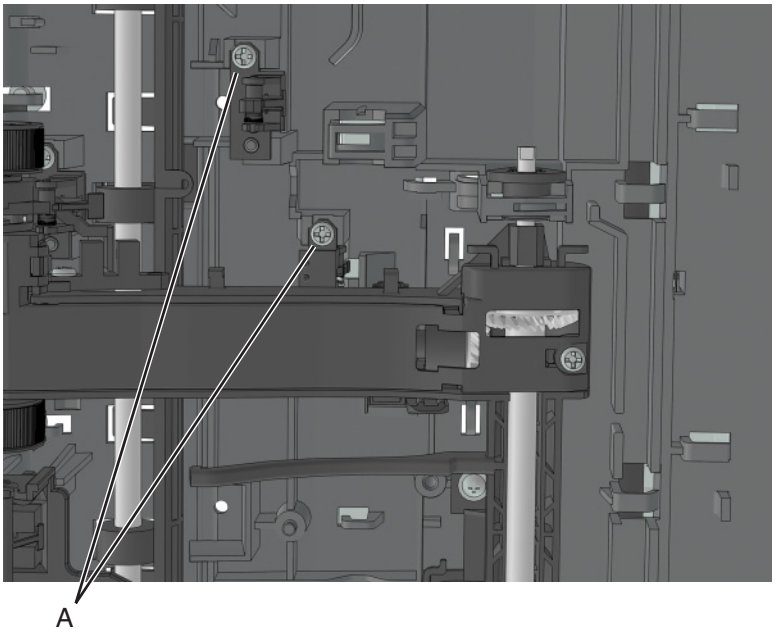

9 Remove the other half of the cable from the printer.

Installation note: Route the cable using the new path, and secure it with a cable tie (A).

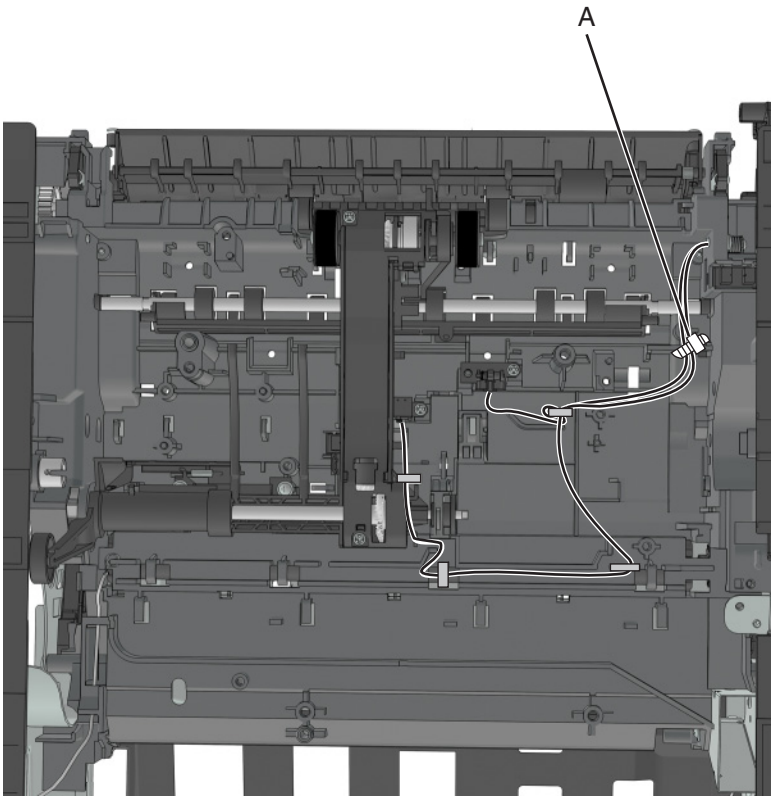

Index sensor removal

1 Remove the left cover. See **“Left cover removal” on page 209**.

2 Remove the right cover. See **“Right cover removal” on page 226**.

3 Remove the rear door and cover. See **“Rear exit door removal” on page 301** and **“Rear cover removal” on page 302**.

4 Remove the power supply. See **“Power supply removal” on page 272**.

5 Remove the power supply shield. See **“Power supply shield removal” on page 273**.

6 Remove the duplex. See **“Duplex removal” on page 274**.

7 Disconnect the cable JINDEX1 from the system board.

8 Remove the screw (A).

9 Route off the cable, and then remove the index sensor.

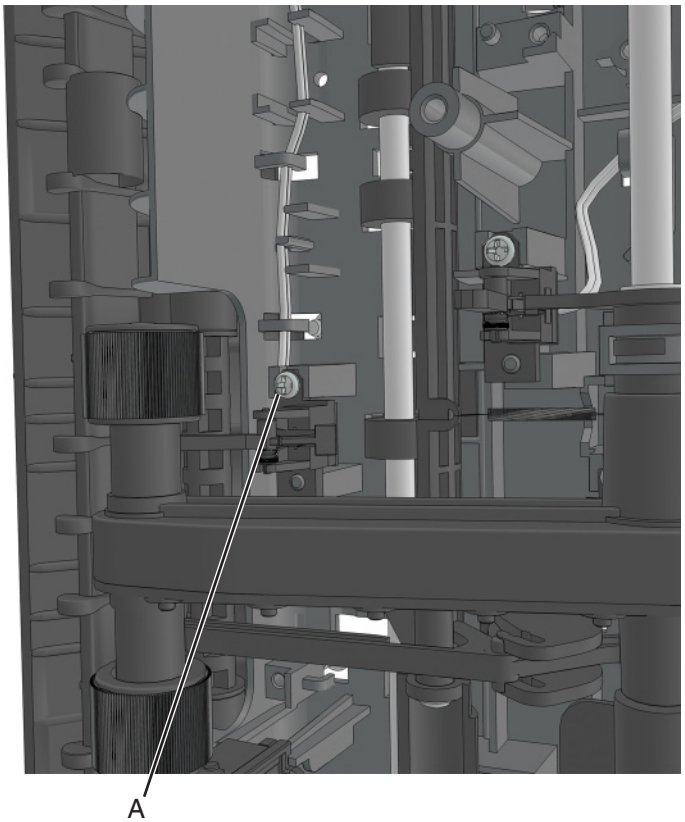

Media present sensor removal

1 Remove the left cover. See **“Left cover removal” on page 209**.

2 Remove the rear door and cover. See **“Rear exit door removal” on page 301** and **“Rear cover removal” on page 302**.

3 Remove the power supply. See **“Power supply removal” on page 272**.

4 Remove the power supply shield. See **“Power supply shield removal” on page 273**.

5 Remove the duplex. See **“Duplex removal” on page 274**.

6 Position the printer so that it sits on its left side.

7 Disconnect the cable from the media present sensor (A).

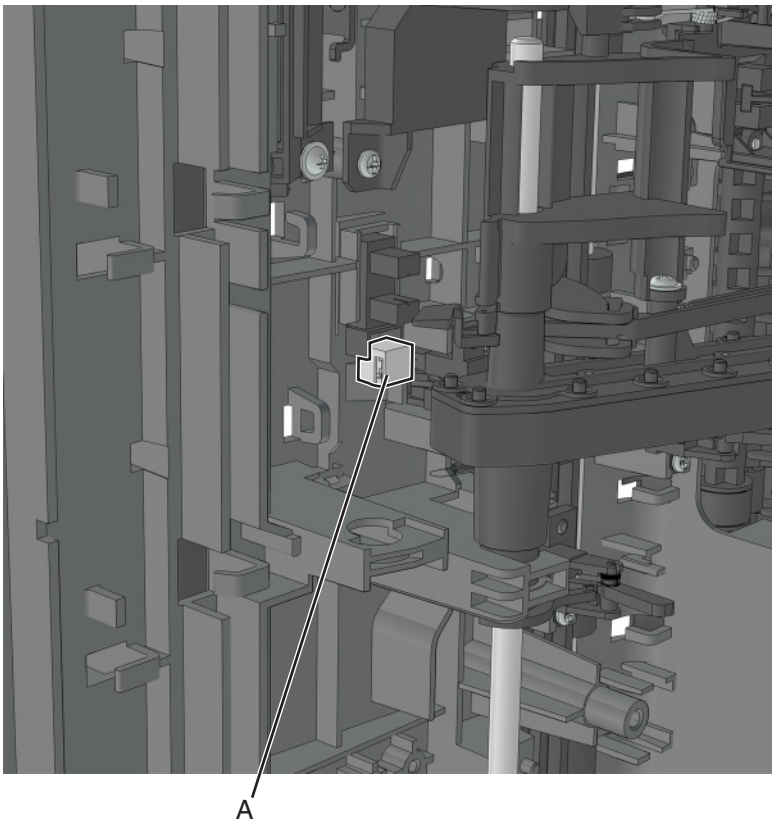

8 From inside the printer, release the three latches (B).

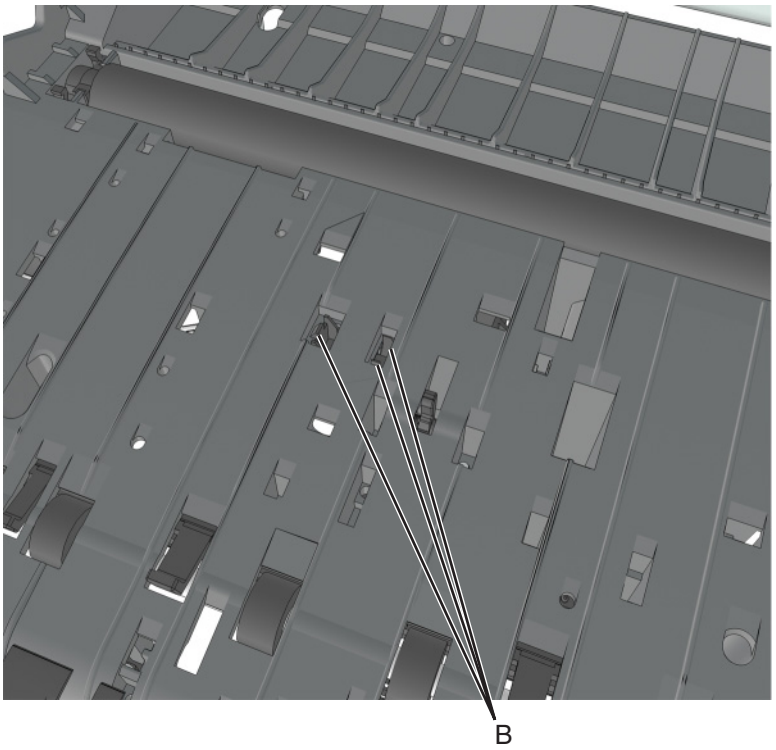

Toner density sensor removal

1 Remove the left cover. See **“Left cover removal” on page 209**.

2 Remove the main drive gearbox. See **“Main drive gearbox removal” on page 211**.

3 Remove the rear door and cover. See **“Rear exit door removal” on page 301** and **“Rear cover removal” on page 302**.

4 Remove the power supply. See **“Power supply removal” on page 272**.

5 Remove the power supply shield. See **“Power supply shield removal” on page 273**.

6 Remove the duplex. See **“Duplex removal” on page 274**.

7 Disconnect the spring (A) from the printer.

8 Remove the two screws (B).

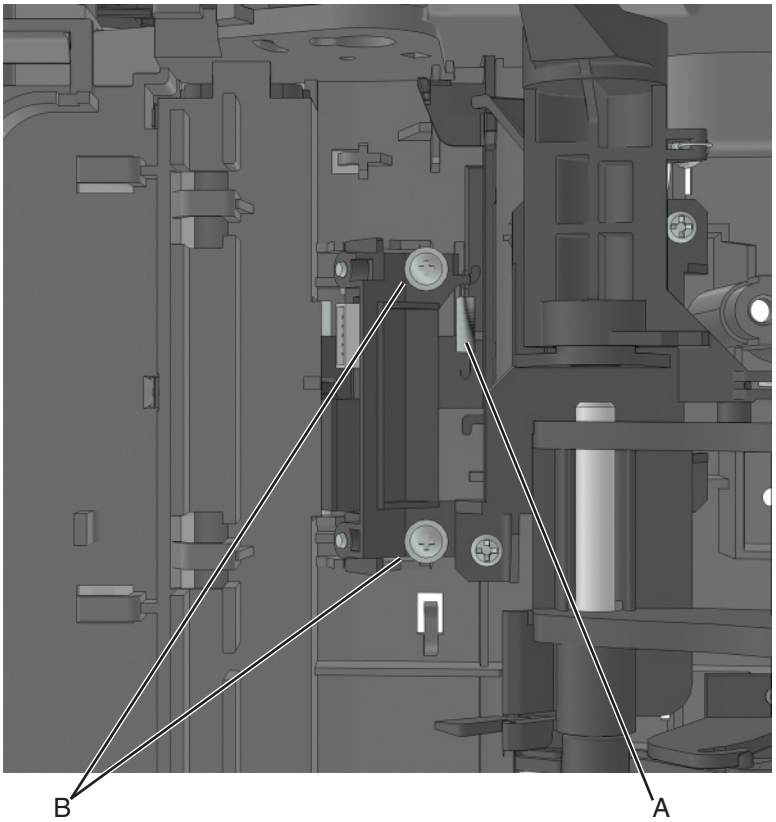

9 Disconnect the cable from the sensor.

Trailing edge sensor removal

1 Remove the left cover. See **“Left cover removal” on page 209**.

2 Remove the right cover. See **“Right cover removal” on page 226**.

3 Remove the rear door and cover. See **“Rear exit door removal” on page 301** and **“Rear cover removal” on page 302**.

4 Remove the power supply. See **“Power supply removal” on page 272**.

5 Remove the power supply shield. See **“Power supply shield removal” on page 273**.

6 Remove the duplex. See **“Duplex removal” on page 274**.

7 Position the printer so that it sits on its left side.

8 Disconnect the cable JACM1 from the controller board.

9 Release the retainer spring (A) from the bracket (B).

10 Remove the screw (C).

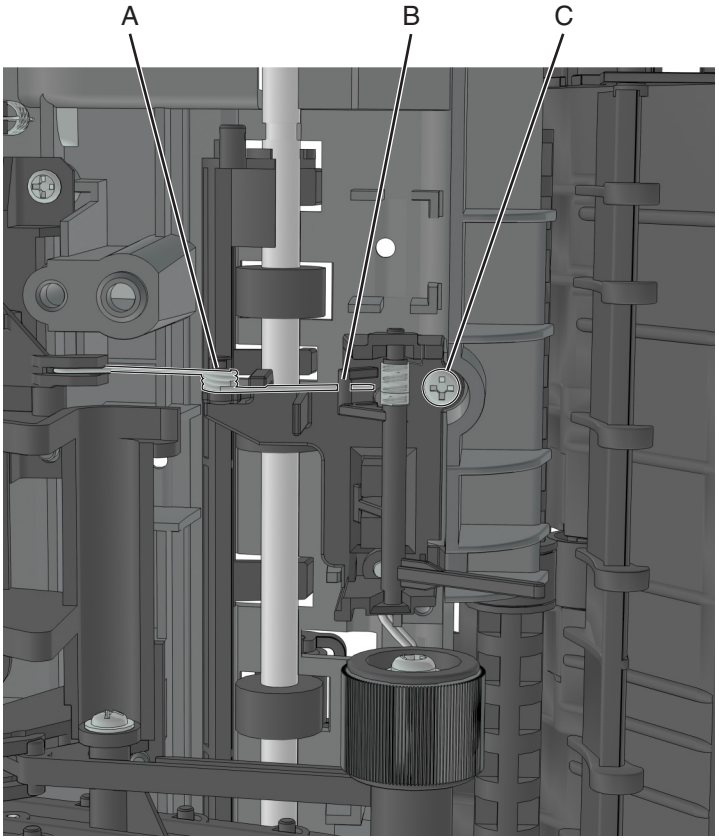

Trailing edge sensor (MX310, MX410) removal

1 Remove the left cover. See **“Left cover removal” on page 209**.

2 Remove the right cover. See **“Right cover removal” on page 226**.

3 Remove the rear door and cover. See **“Rear exit door removal” on page 301** and **“Rear cover removal” on page 302**.

4 Remove the power supply. See **“Power supply removal” on page 272**.

5 Remove the power supply shield. See **“Power supply shield removal” on page 273**.

6 Remove the duplex. See **“Duplex removal” on page 274**.

7 Disconnect the cable JACM1 from the controller board, and cut it near the frame.

8 Remove the screw (A), and then remove the sensor.

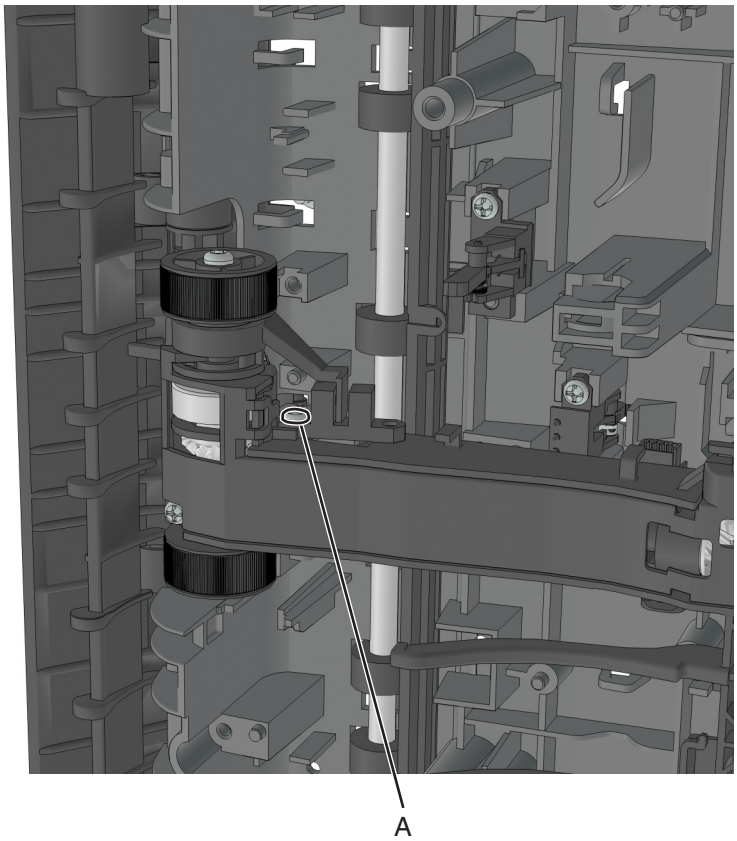

9 Remove the other half of the cable from the printer.

Installation notes:

a Install the sensor to the ACM.

b Route the cable along the two cable holders on the side of the ACM.

Note: Make sure that the cable is not loose.

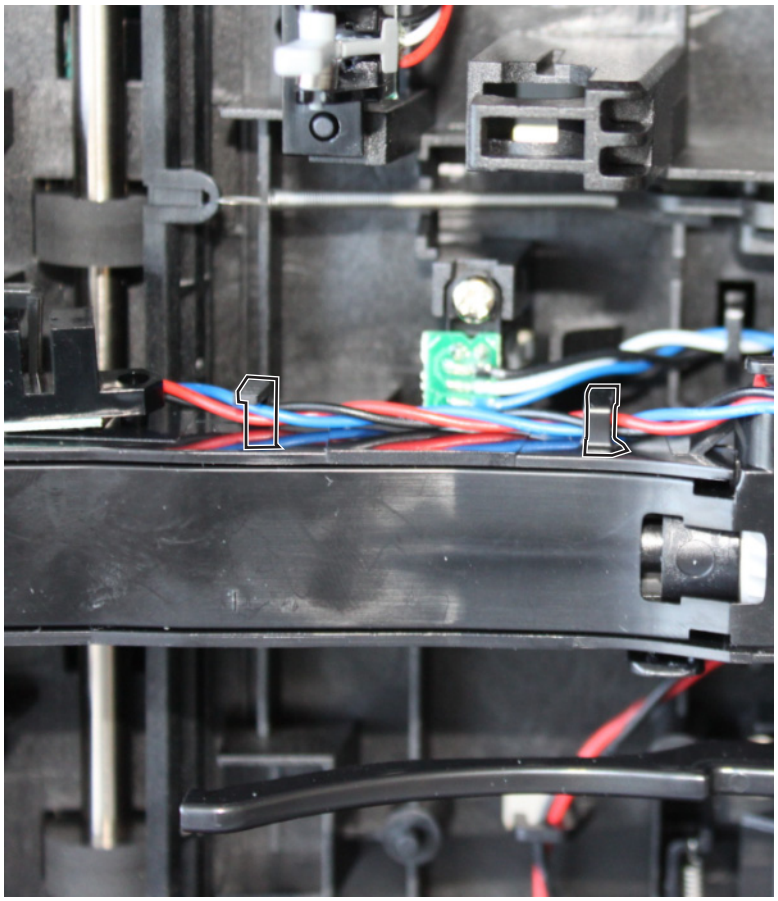

c Bring the cable in front of the two cable holders near the ACM shaft.

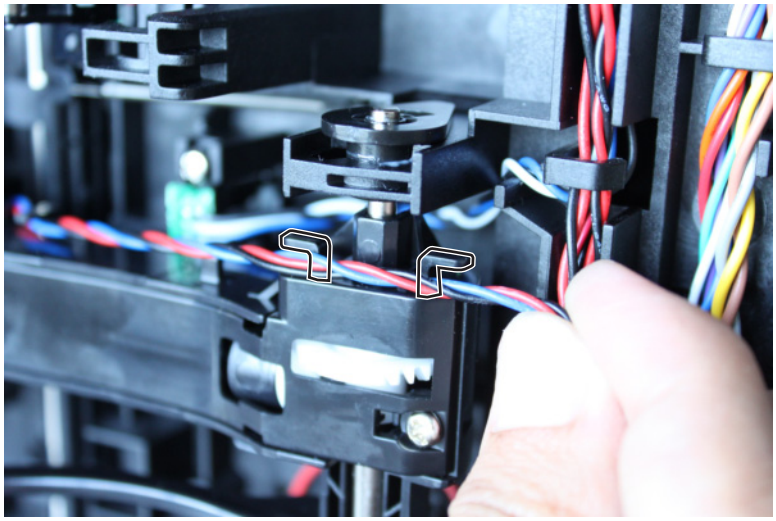

d Loop the cable behind the right cable holder.

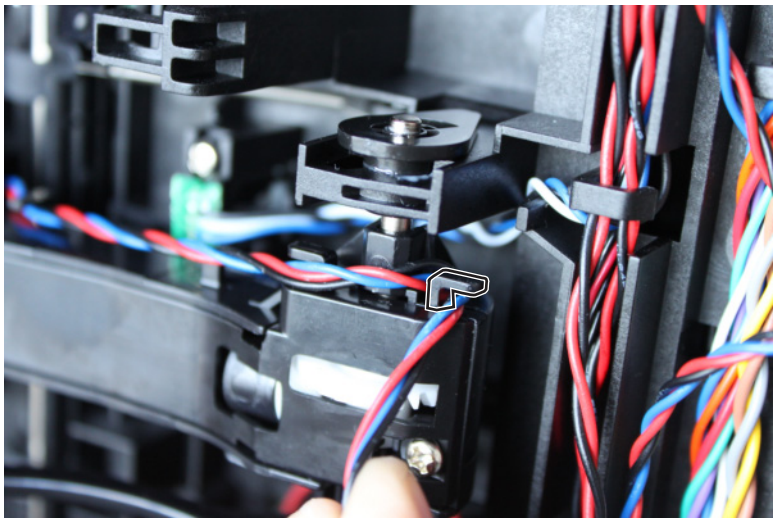

e Twist the cable so that it forms a loop.

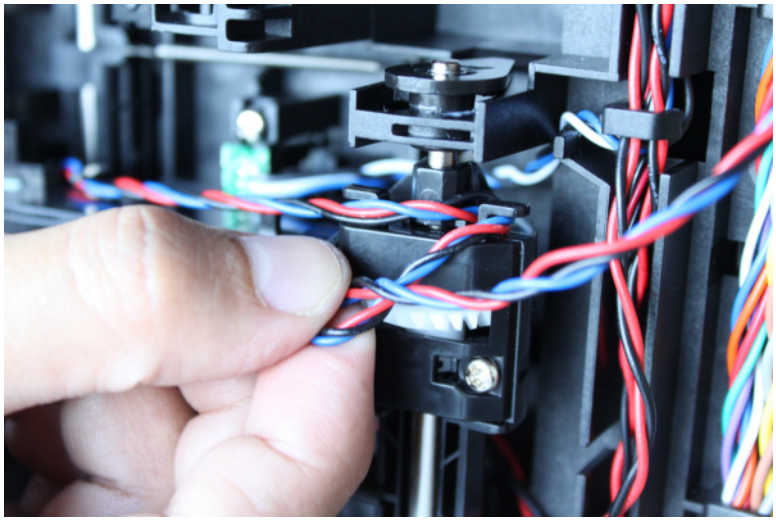

f Place the loop over the left cable holder.

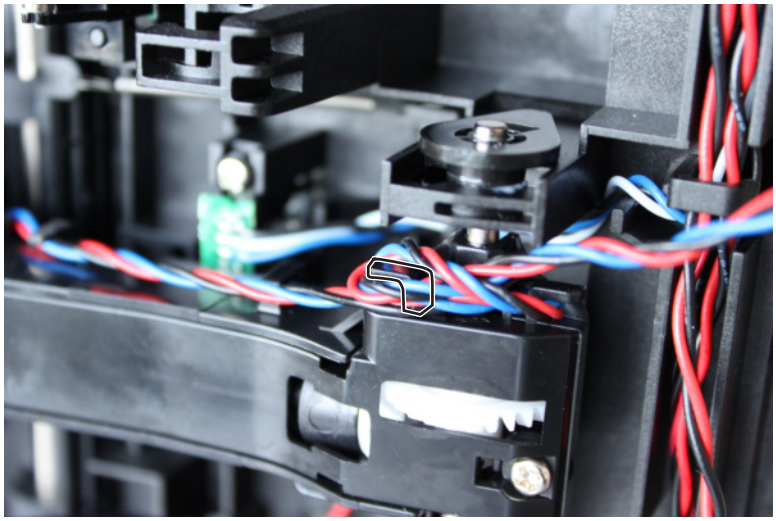

g Pull the free end to make sure that the cable is tightly looped around the cable holders.

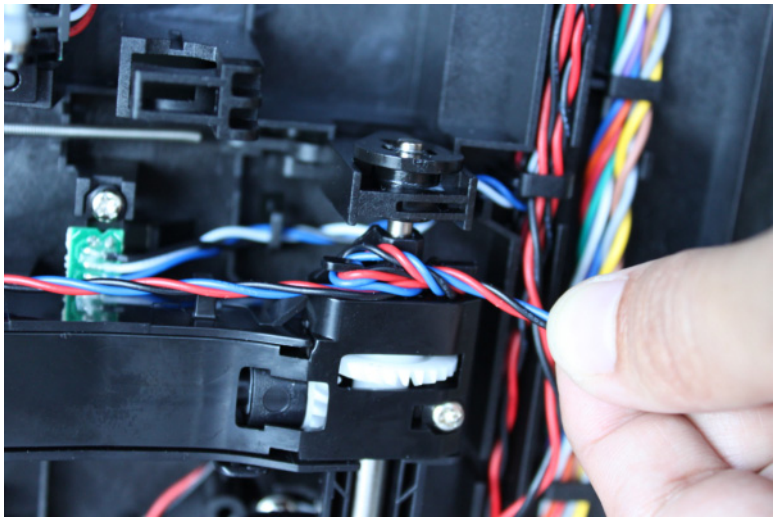

h Route the cable using the new path, and secure it with a cable tie (A).

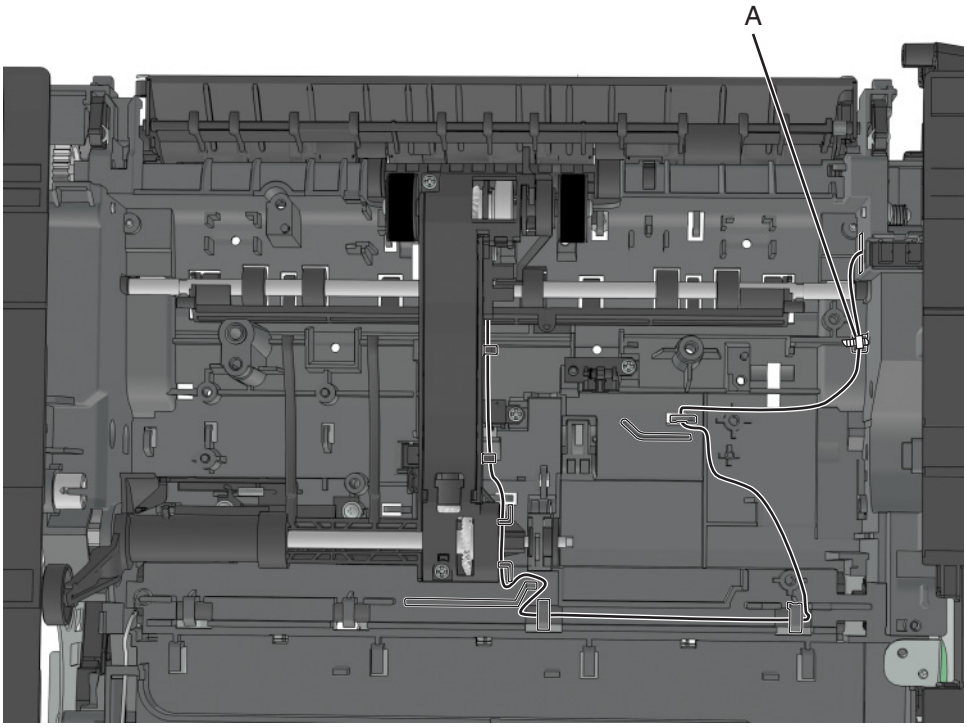

ACM assembly removal

1. Remove the left cover. See **"Left cover removal" on page 209**.
2. Remove the rear door and cover. See **"Rear exit door removal" on page 301** and **"Rear cover removal" on page 302**.
3. Remove the power supply. See **"Power supply removal" on page 272**.
4. Remove the power supply shield. See **"Power supply shield removal" on page 273**.
5. Remove the duplex. See **"Duplex removal" on page 274**.
6. Position the printer so that it sits on its left side.
7. Remove the retainer spring (A).
8. Remove the spring (B).

9 Remove the two screws (C).

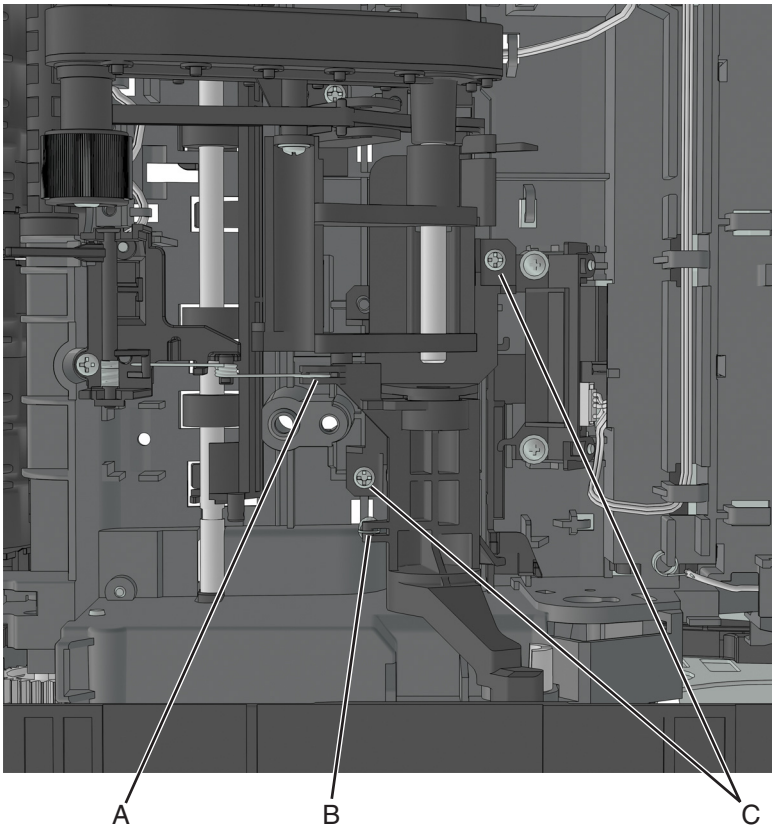

Below is the image of the cam release and bracket.

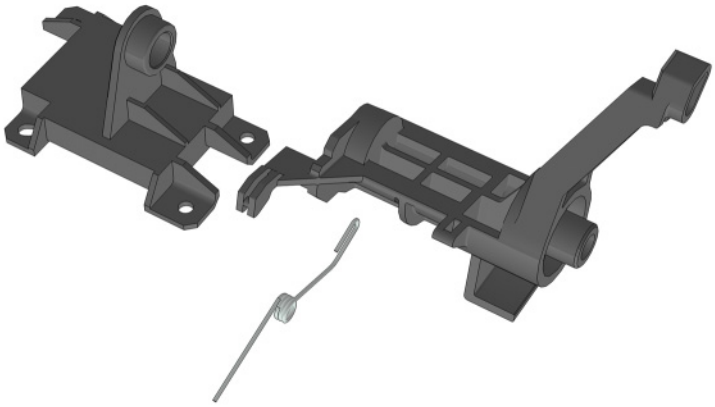

10 Remove the screw (D) securing the ACM lift cam to the ACM housing.

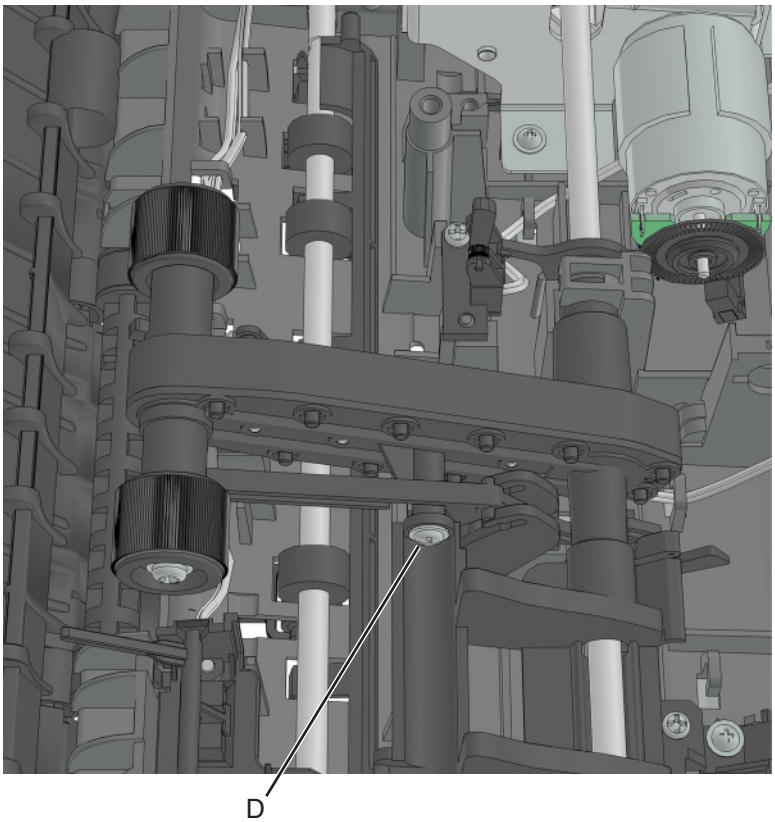

11 Remove the ACM lift cam by sliding it off the shaft.

12 Remove the E-clip (E), and slide the washer (F) from the shaft.

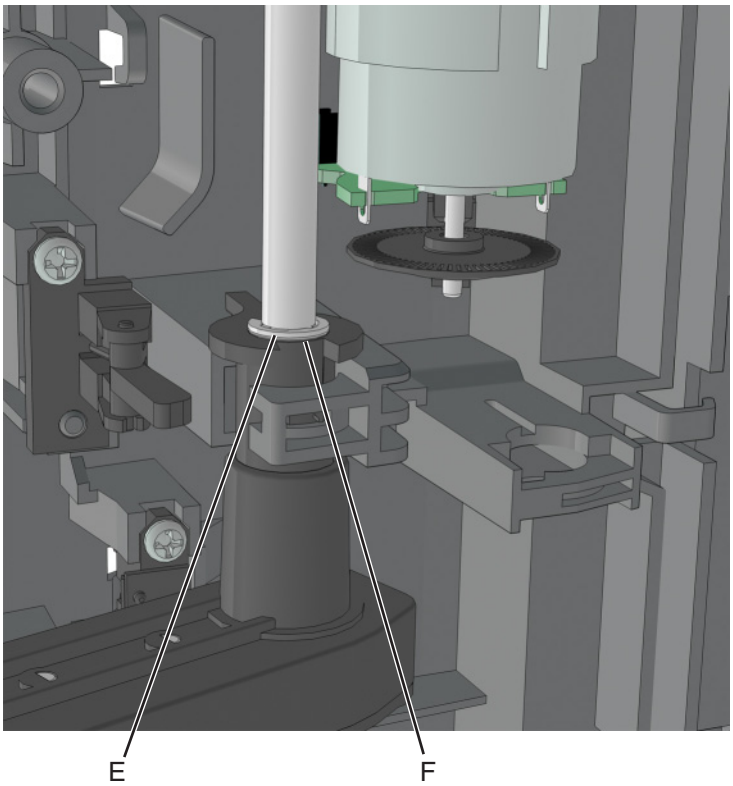

13 Release the lock by sliding the bushing and then rotating it clockwise.

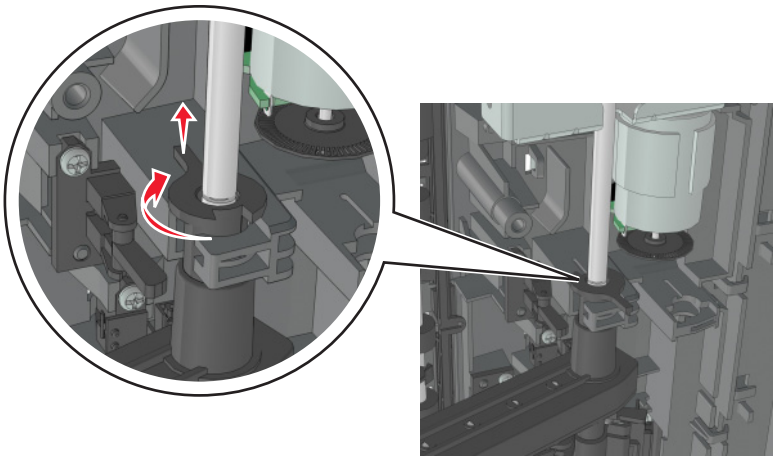

14 Remove the media present sensor flag by pushing it until it *clicks*, and slide it off the ACM assembly.

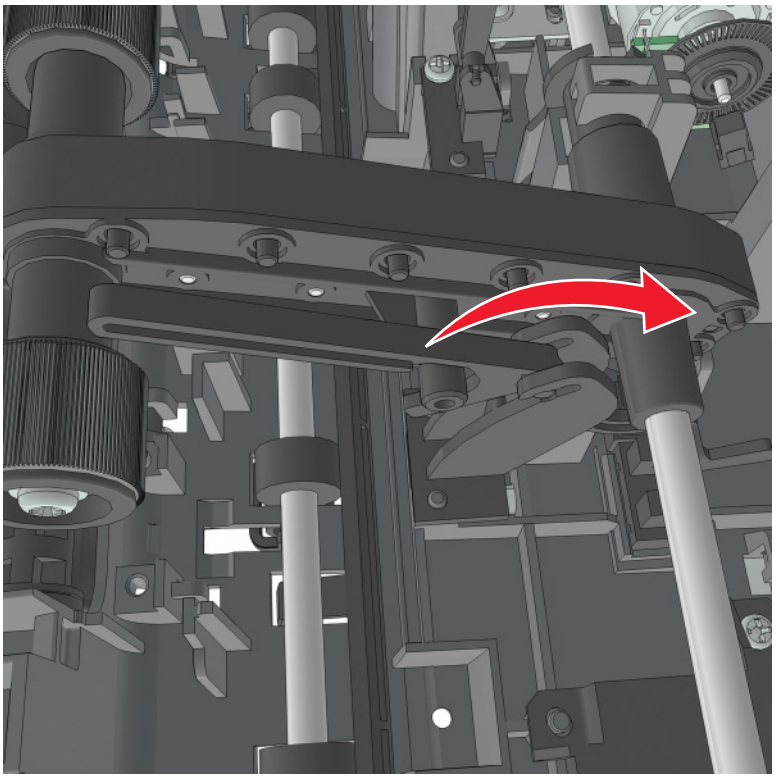

15 Swing the ACM assembly.

16 Remove the screw (G) securing the media present sensor bracket.

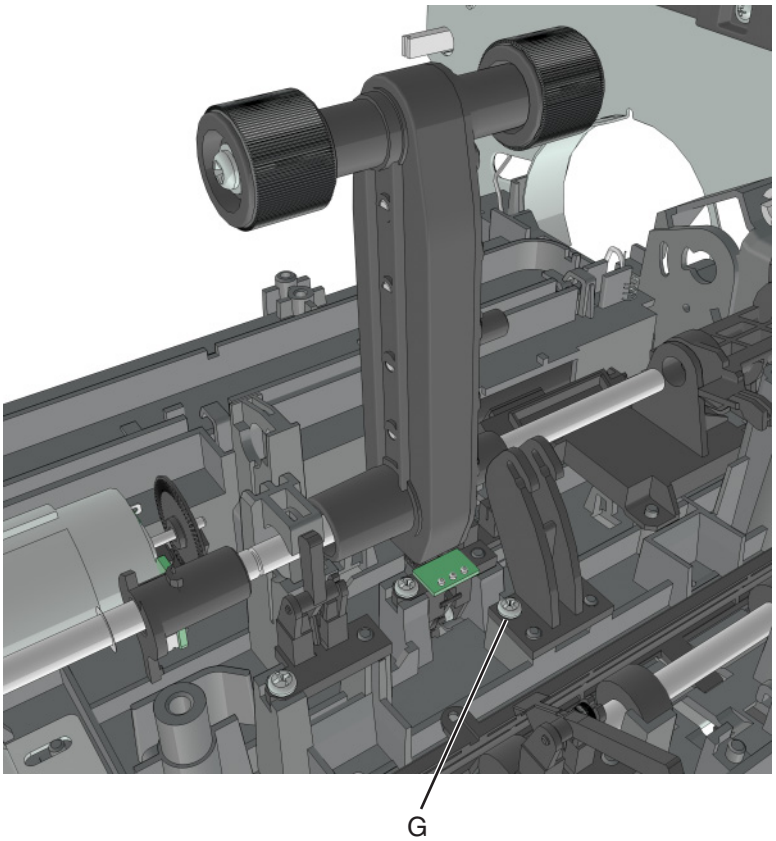

17 Remove the ACM assembly with shaft.

Below is the ACM assembly with media present sensor flag and bracket.

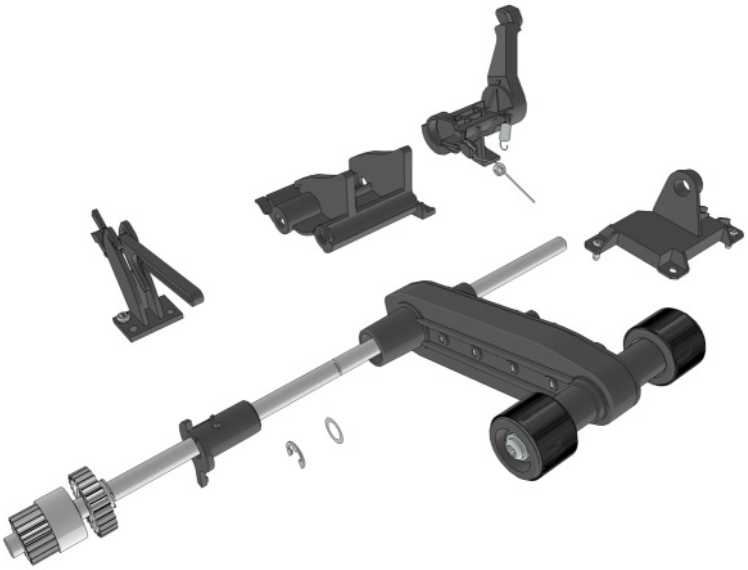

ACM assembly (MX310, MX410) removal

1 Remove the left cover. See **"Left cover removal" on page 209**.

2 Remove the main drive gearbox. See **"Main drive gearbox removal" on page 211**.

3 Remove the rear door and cover. See **"Rear exit door removal" on page 301** and **"Rear cover removal" on page 302**.

4 Remove the power supply. See **"Power supply removal" on page 272**.

5 Remove the power supply shield. See **"Power supply shield removal" on page 273**.

6 Remove the duplex. See **"Duplex removal" on page 274**.

7 Remove the ACM clutch. See **"ACM clutch removal (MX310, MX410)" on page 219**.

Warning—Potential Damage: Do not cut the cable (leave the ACM clutch hanging).

8 Remove the screw (A) and then detach the trailing edge sensor.

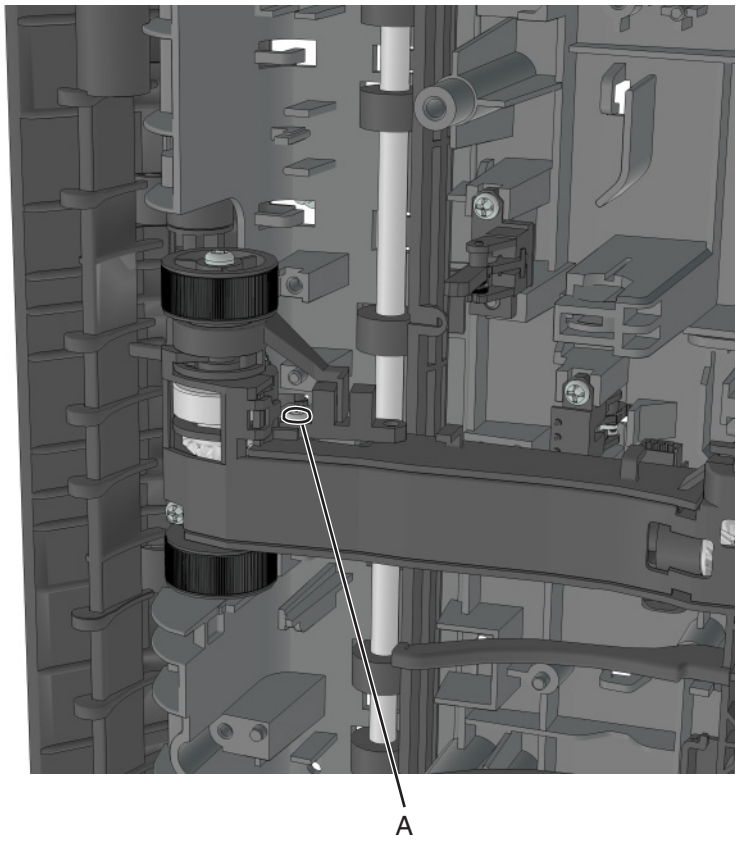

9 Disconnect the two springs (B).

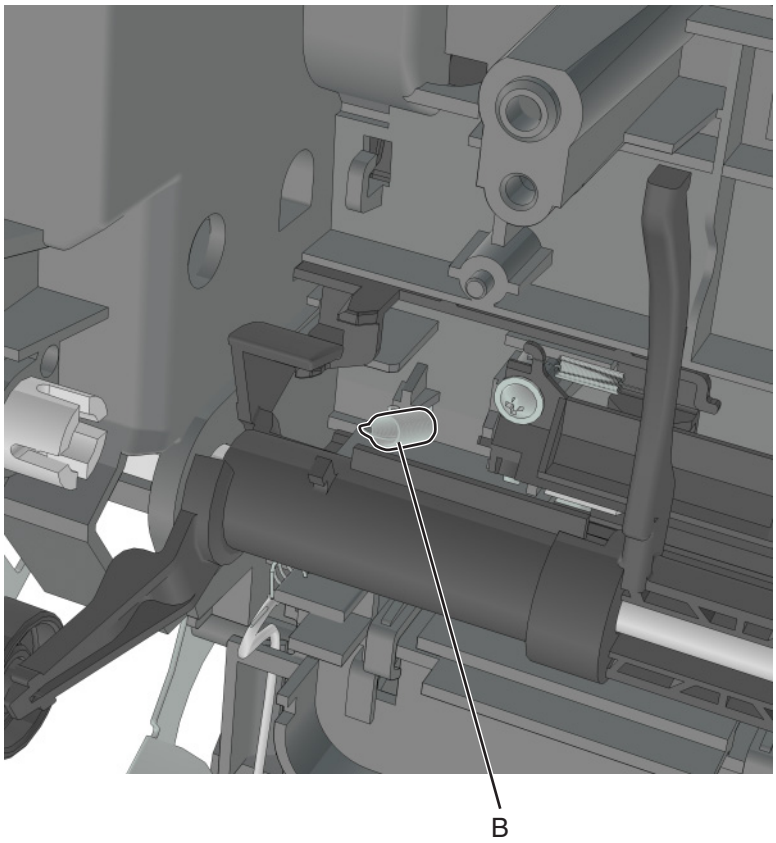

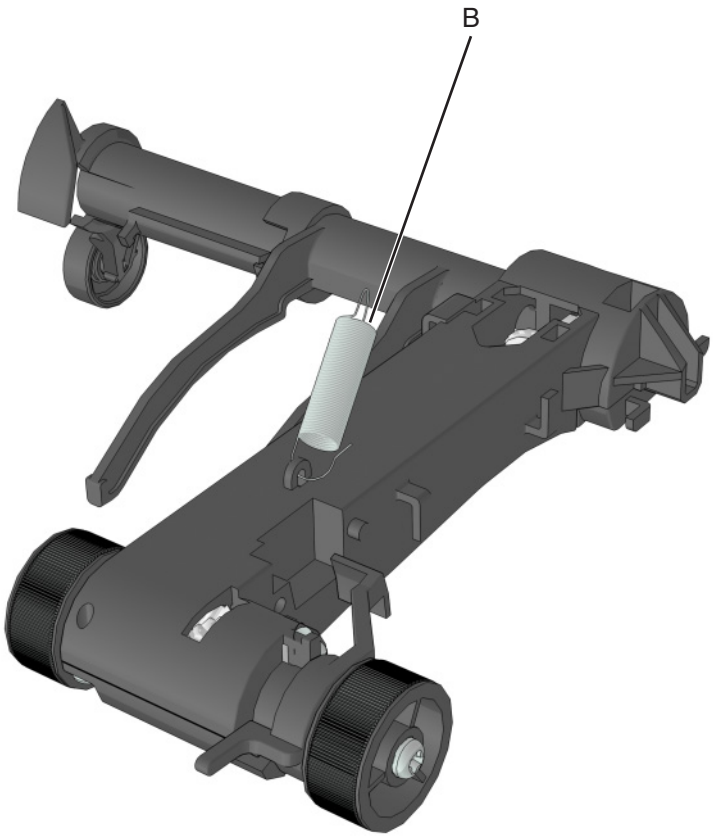

10 Pry the pointed end of the ACM bushing to release the locking pin underneath.

11 Rotate, and then remove the ACM bushing.

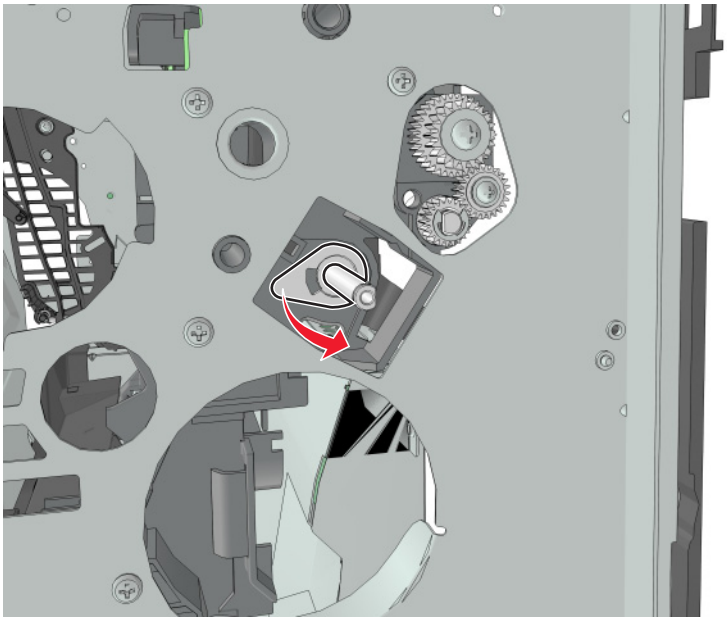

12 Pry the pointed end of the 2nd pickup pushing to release the locking pin underneath.

13 Rotate, and then remove the 2nd pickup bushing.

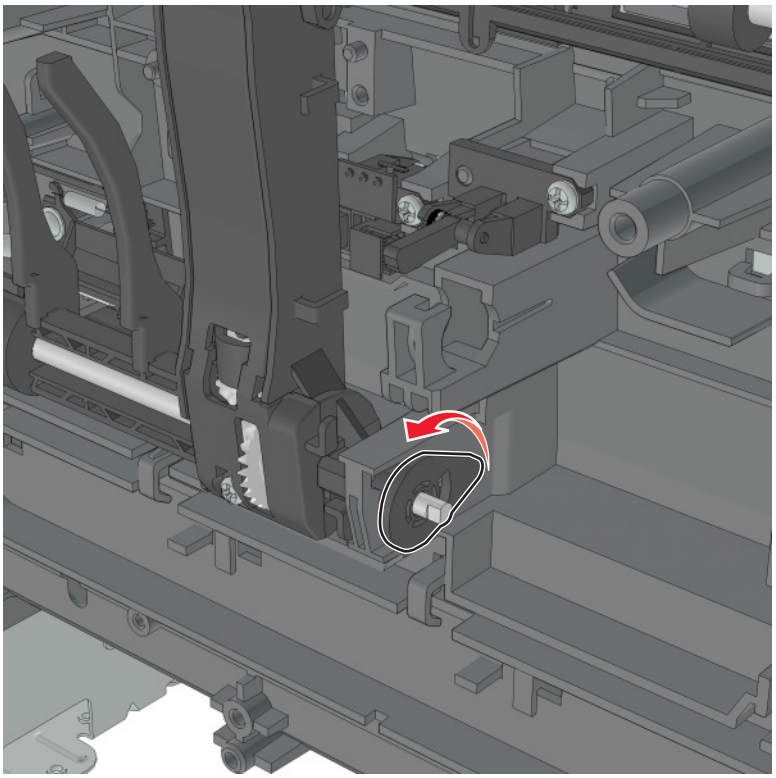

14 Pull out the shaft, and remove the ACM.

Pick/lift motor gearbox removal

1 Remove the left cover. See **“Left cover removal” on page 209**.

2 Remove the rear door and cover. See **“Rear exit door removal” on page 301** and **“Rear cover removal” on page 302**.

3 Remove the power supply. See **“Power supply removal” on page 272**.

4 Remove the power supply shield. See **“Power supply shield removal” on page 273**.

5 Remove the duplex. See **“Duplex removal” on page 274**.

6 Remove the ACM assembly. See **“ACM assembly removal” on page 288**.

7 Position the printer so that it sits on its left side.

8 Remove the three screws (A).

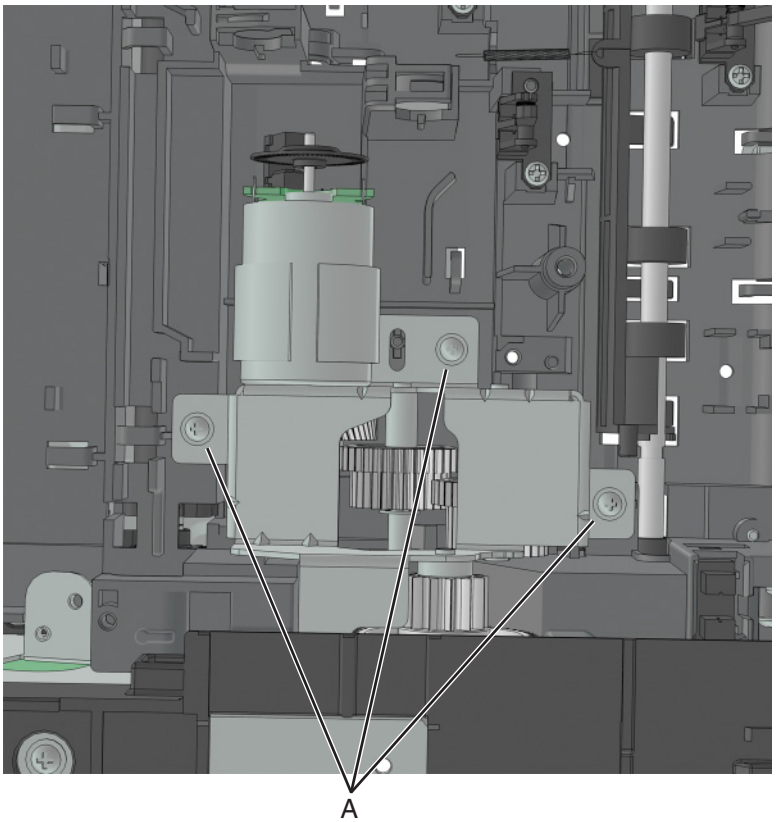

9 Disconnect the cable from the pick/lift motor gearbox.

Tray guide removal

Left guide

Installation note: Before removing the guide, note the position of the ground spring. It will need to be re-installed when the guide is re-installed.

1 Remove the rear cover. See **"Rear cover removal" on page 302**.

2 Remove the left cover. See **"Left cover removal" on page 209**.

3 Turn the printer on its side (left side down), then remove the three screws (A) from the left guide.

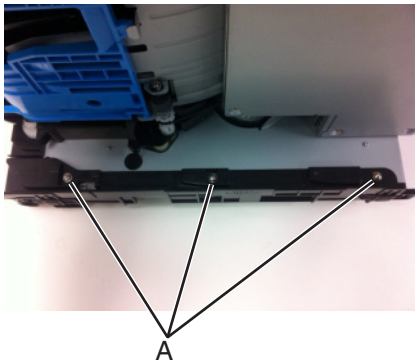

4 Remove the left guide.

Installation note: When re-installing the guide, insert the spring as shown.

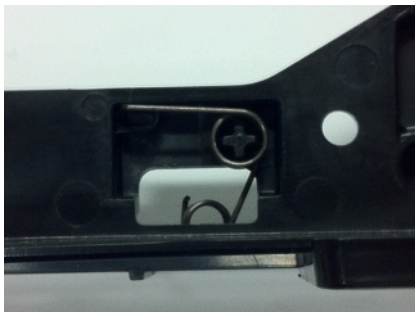

Right guide

1 Remove the rear cover. See **"Rear cover removal" on page 302**.

2 Remove the right cover. See **"Right cover removal" on page 226**.

3 Remove the controller board shield. See **"Controller board shield removal" on page 234**.

4 Disconnect the option cable (JOPT1) from the controller board.

5 Turn the printer on its side (right side down), then remove the three screws (B) from the right guide.

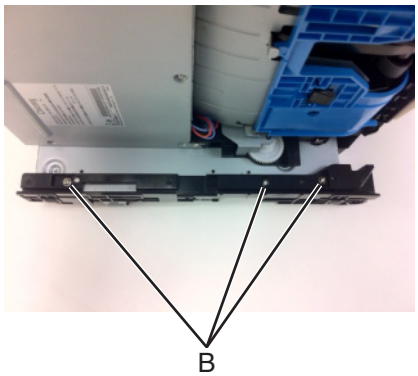

6 Remove the guide from the frame.

7 Squeeze the latches to release the connector, then push the connector off the guide.

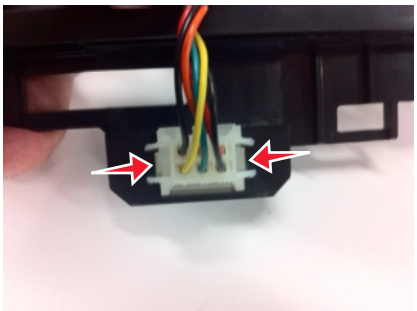

Rear side removals

Dust cover removal

1 Press the latches on each side of the dust cover.

2 Remove the dust cover.

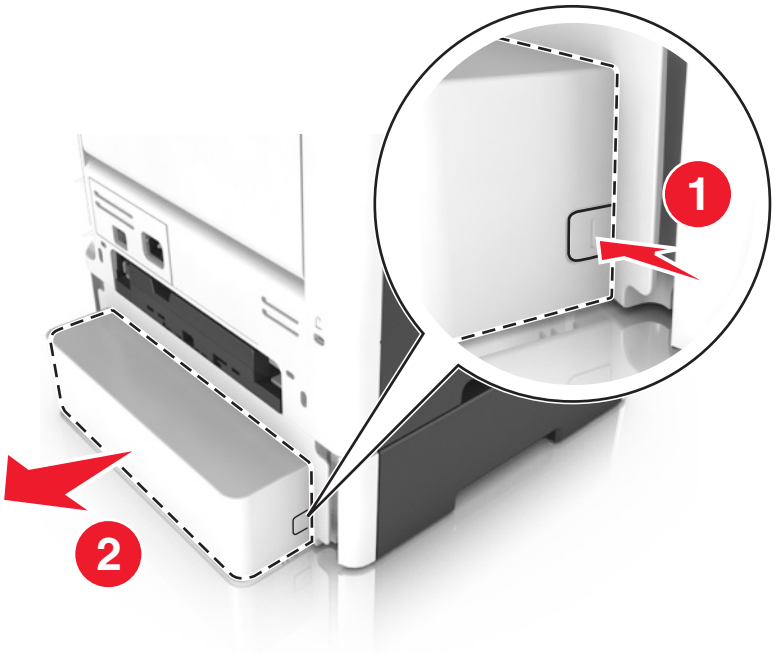

Rear exit door removal

1 Open the rear door as shown below.

2 Pull the exit door upward to release the hinges, and remove.

Rear cover removal

1 Open the rear exit door.

2 Remove the two screws (A) securing the rear cover.

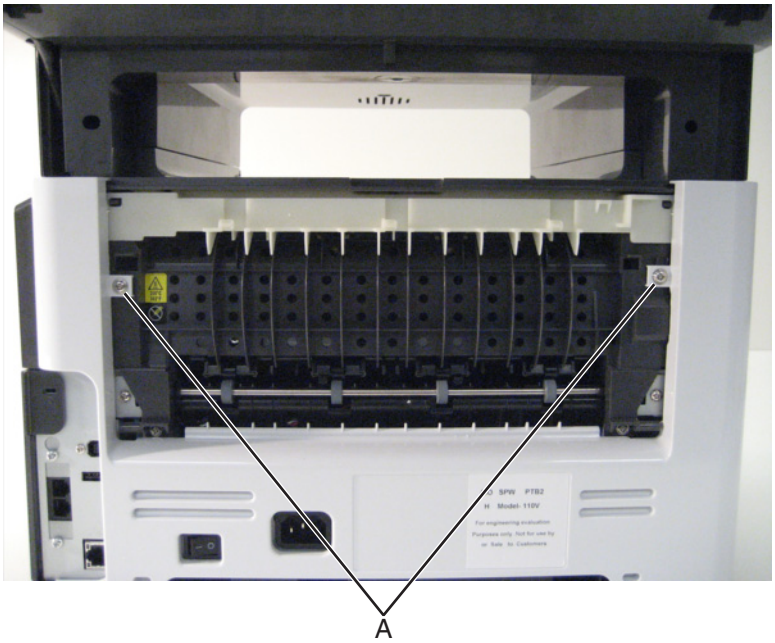

3 Lift the upper portion of the machine to release the cover, and then remove the cover.

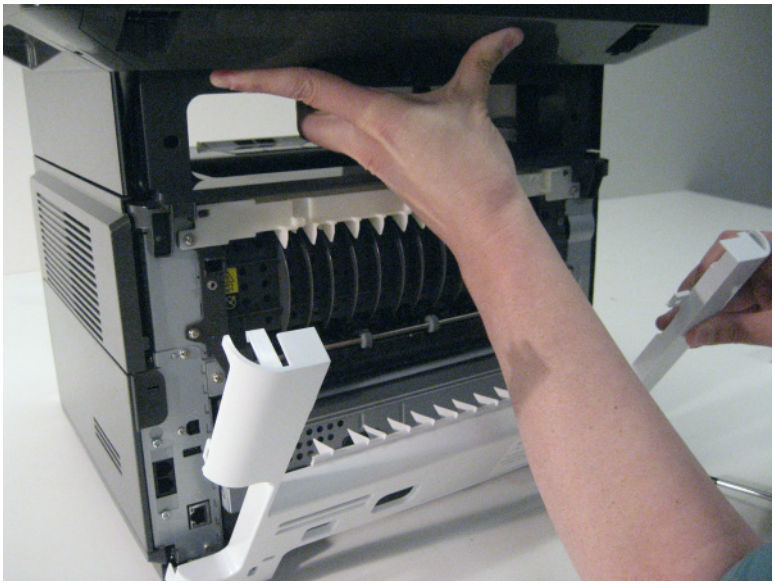

Narrow media/bin full sensor removal

1 Remove the right cover. See **"Right cover removal" on page 226**.

2 Remove the left cover. See **"Left cover removal" on page 209**.

3 Remove the rear door and cover. See **“Rear exit door removal” on page 301** and **“Rear cover removal” on page 302**.

4 Remove the scanner assembly. See **“Scanner assembly removal” on page 319**.

5 Remove the top cover. See **“Top cover assembly removal” on page 307**.

6 Disconnect cable JNRW1 from the controller board.

7 Remove the six screws (A) securing the narrow media/bin full sensor and upper exit guide to the redrive assembly.

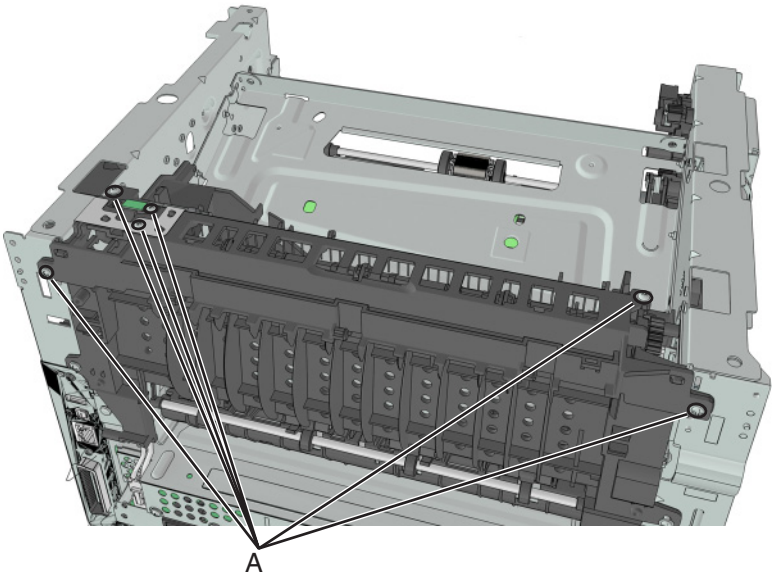

8 Remove the ground (B), narrow media/bin full sensor (C), and sensor flag (D).

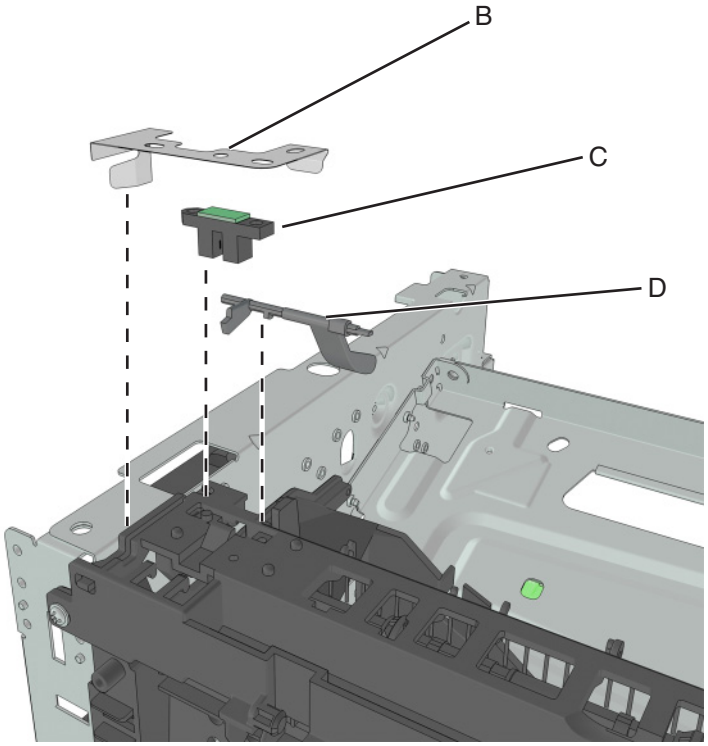

Redrive assembly removal

1 Remove the right cover. See **“Right cover removal” on page 226**.

2 Remove the left cover. See **“Left cover removal” on page 209**.

3 Remove the rear door and cover. See **“Rear exit door removal” on page 301** and **“Rear cover removal” on page 302**.

4 Remove the scanner assembly. See **“Scanner assembly removal” on page 319**.

5 Remove the top cover. See **“Top cover assembly removal” on page 307**.

6 Disconnect cable JNRW1 from the controller board.

7 Remove the two screws (A), and then disconnect the reverse solenoid.

Note: Do not disconnect the reverse solenoid cable from the controller board.

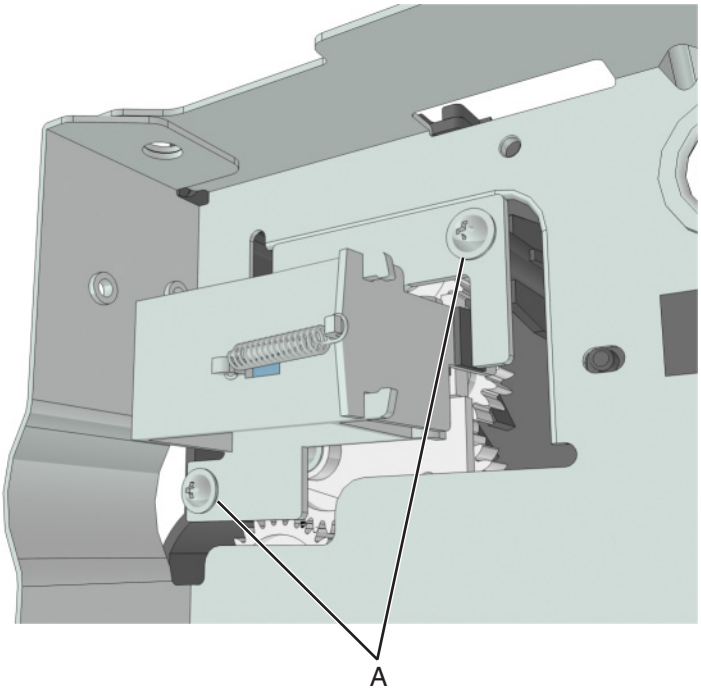

8 Remove the six screws (B) securing the redrive assembly.

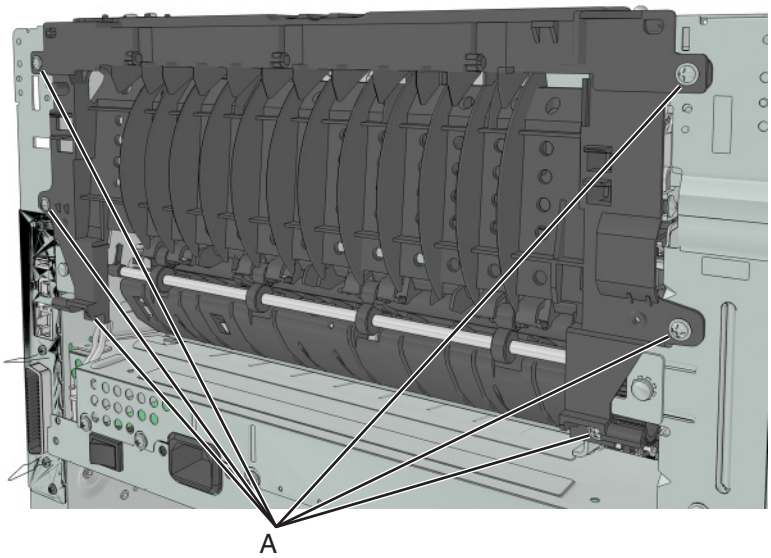

Fuser removal

1 Remove the right cover. See **“Right cover removal” on page 226**.

2 Remove the rear door and cover. See **“Rear exit door removal” on page 301** and **“Rear cover removal” on page 302**.

3 Remove the redrive assembly. See **“Redrive assembly removal” on page 304**.

4 Disconnect the cable JEXIT1 from the controller board.

5 Disconnect the two cables (A).

6 Remove the two screws (B) securing the fuser.

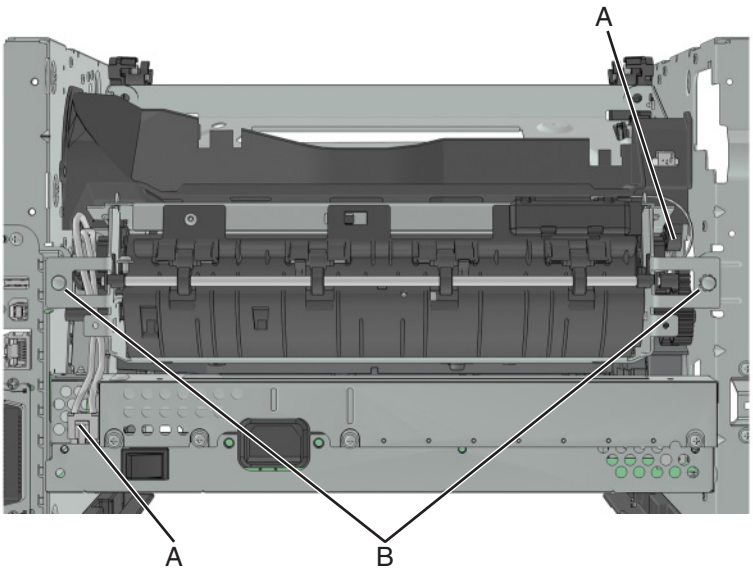

Top side removals

Top cover assembly removal

1 Remove the scanner assembly. See **“Scanner assembly removal” on page 319**.

2 Remove the two screws securing the top cover to the printer frame assembly.

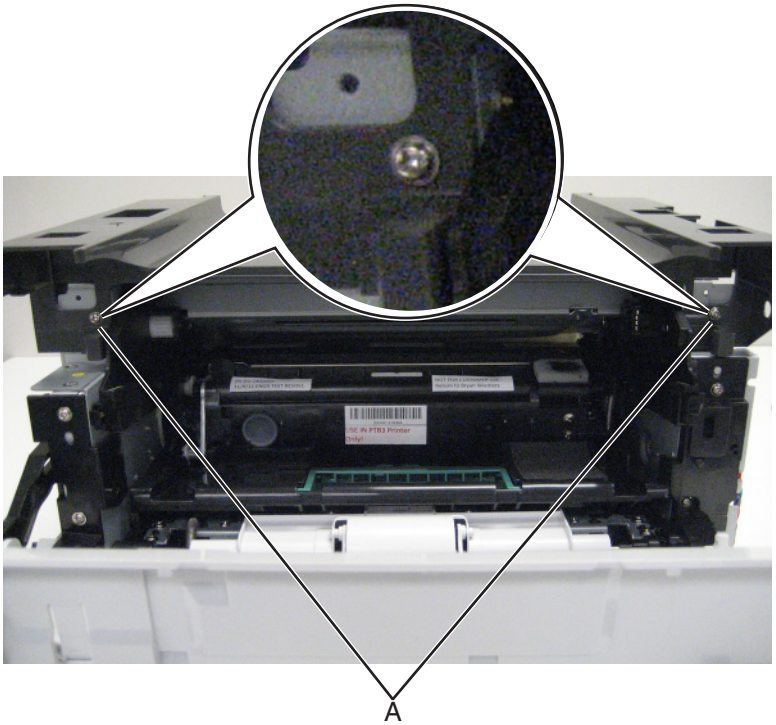

3 Lift the top cover assembly, and remove.

Bin extender removal

1 Pull the bin extender to the extended position.

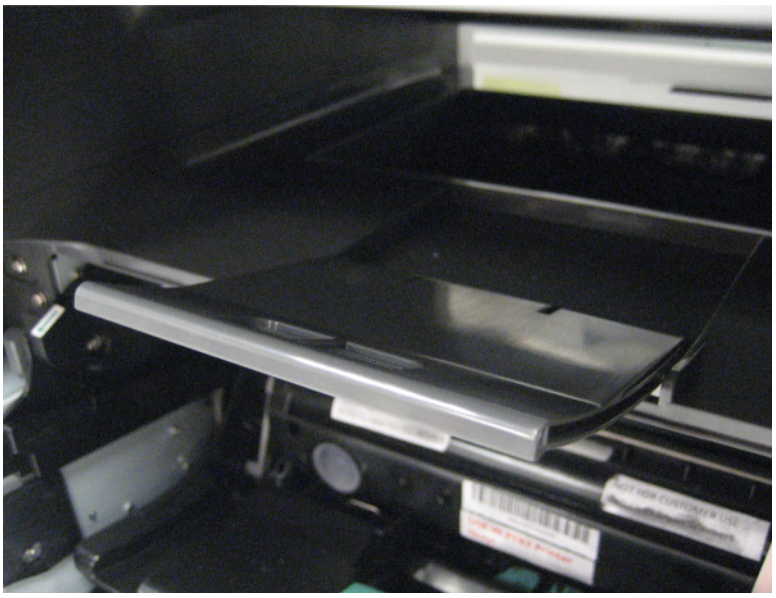

2 Push up on the center tab of the bin extender while pulling the extender towards the front of the printer.

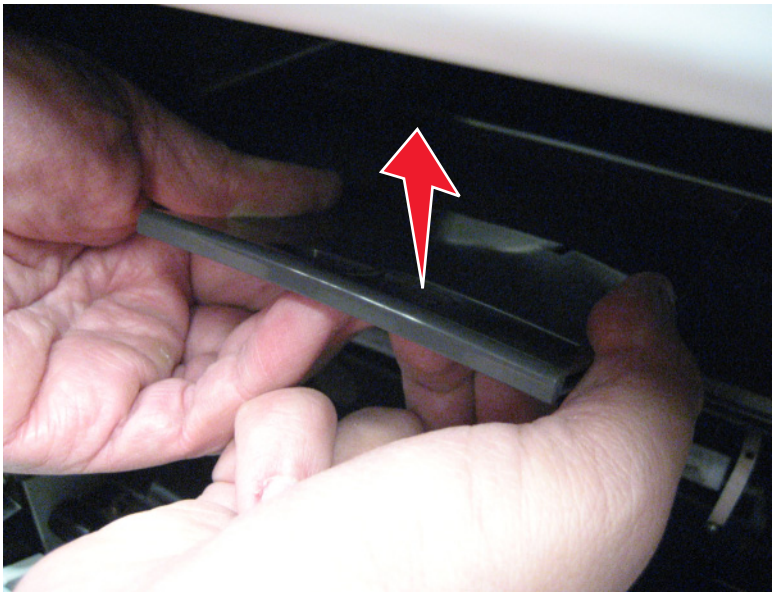

3 Pull the bin extender off the top cover.

Laser scanning unit (LSU) removal

MFP printhead adjustment

After re-installing the current LSU or installing a new LSU, a mechanical and electronic LSU adjustment must be performed. Before starting the LSU removal, disable the scanner in the configuration menu. After removing the scanner assembly from the MFP, remove the control panel assembly from the scanner. Attach the control panel assembly cable directly to JUICC on the controller board.

After installing the LSU, perform the mechanical and electronic LSU adjustments with the printer in this configuration. When the LSU is properly adjusted, re-install the control panel assembly to the scanner, and then re-install the scanner assembly to the MFP.

Removal procedure

1 Remove the top cover. See **"Top cover assembly removal" on page 307**.

2 Disconnect the cable (J6) from the controller board.

3 Disconnect the cable (A) from the LSU.

4 Before loosening the screws securing the LSU, use a sharp pencil or a small, flat-blade screwdriver to mark the location of the LSU on the printer frame. This will be helpful in positioning the new LSU.

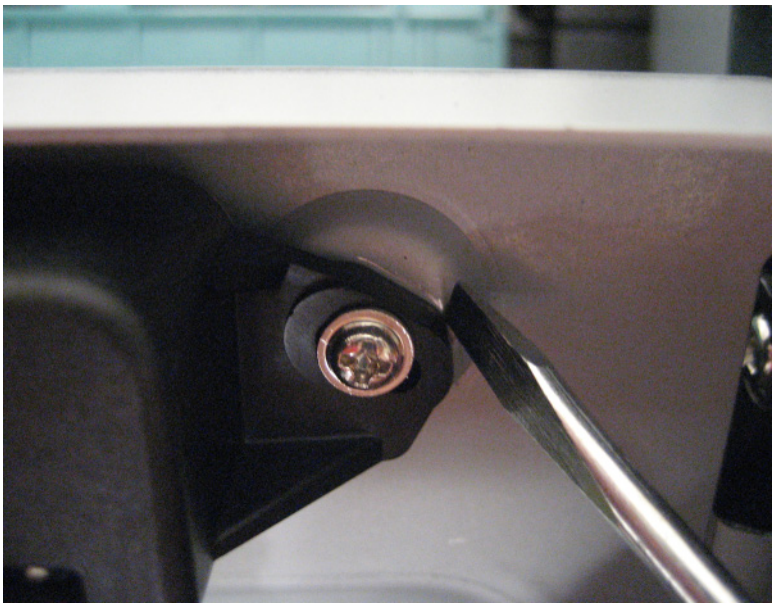

5 Remove the three screws (B) securing the LSU.

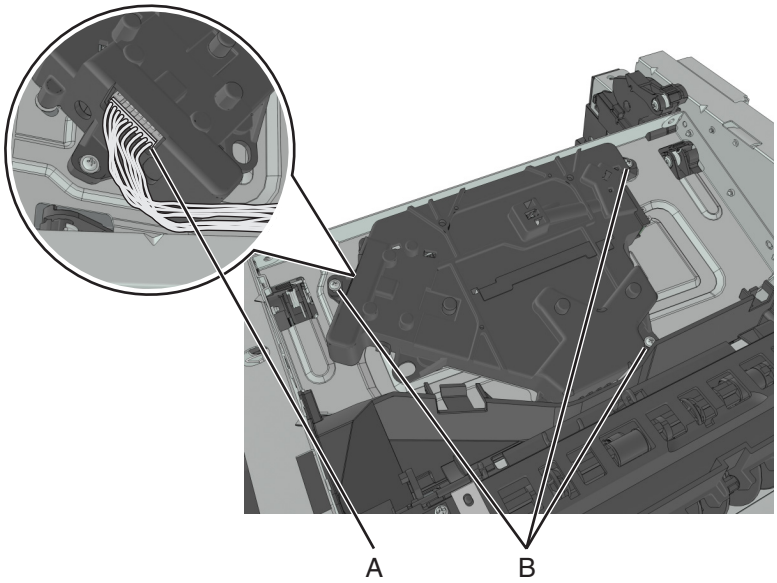

Installation note: Mechanical and electronic LSU adjustments are required to complete the installation of the LSU. See **"Printhead assembly adjustments" on page 206**.

ADF/scanner removals

ADF separator pad removal

1 Open the ADF top cover.

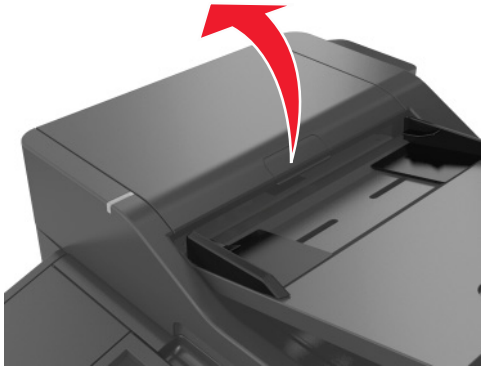

2 Squeeze the latches to release the separator pad.

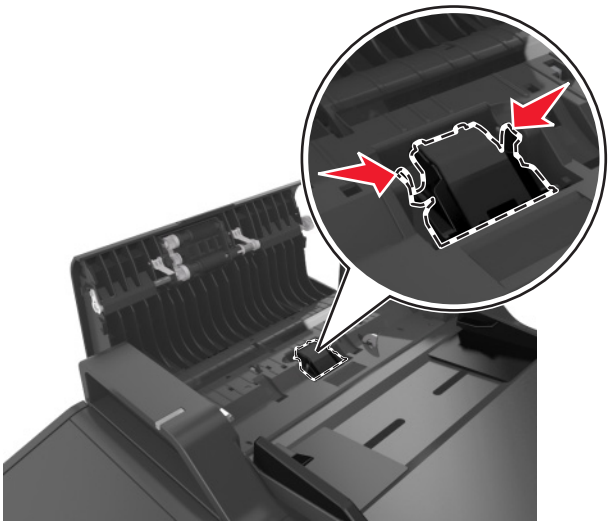

3 Pull away the separator pad and remove.

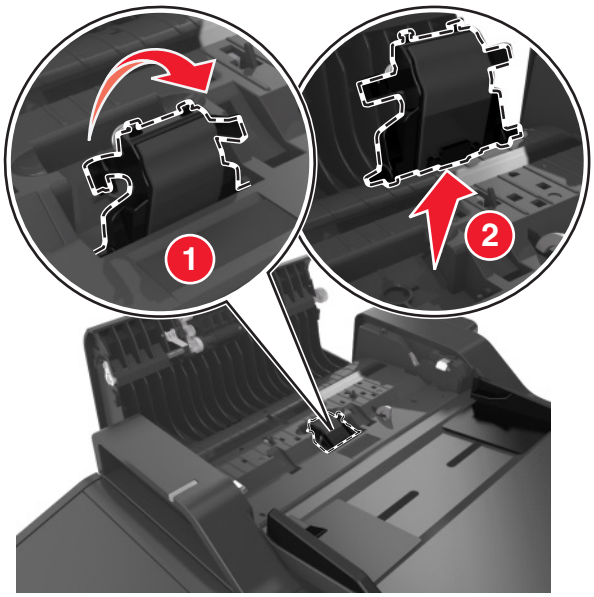

ADF separator roll removal

1 Open the ADF top cover.

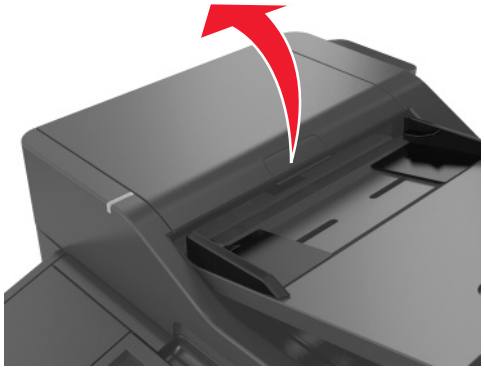

2 Squeeze the latches to release the separator roll.

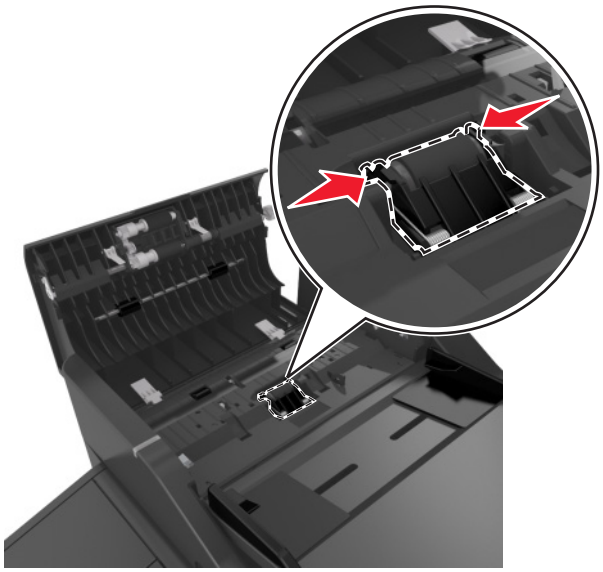

3 Pull away the separator roll and remove.

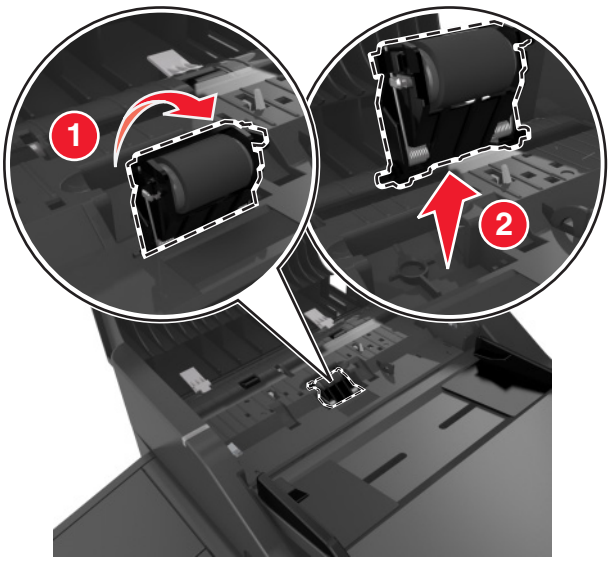

Flatbed cushion removal

1 Open the scanner.

2 Hold the cushion by its handles, then peel it off the scanner.

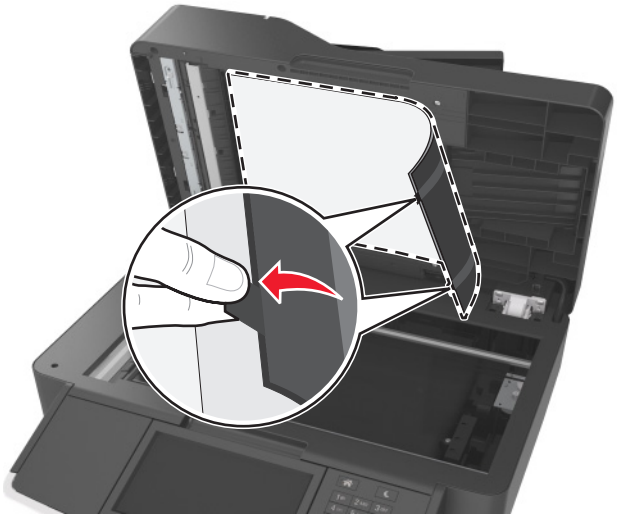

Scanner front cover removal

1 Open the front cover.

2 Pull down the cover and remove.

Scanner rear cover removal

Hold the cover at both ends, and then pull it off the scannner.

ADF input tray removal

1 Firmly grasp the tray with one hand.

2 Release the tray by pushing its front edge inwards, and then remove the tray.

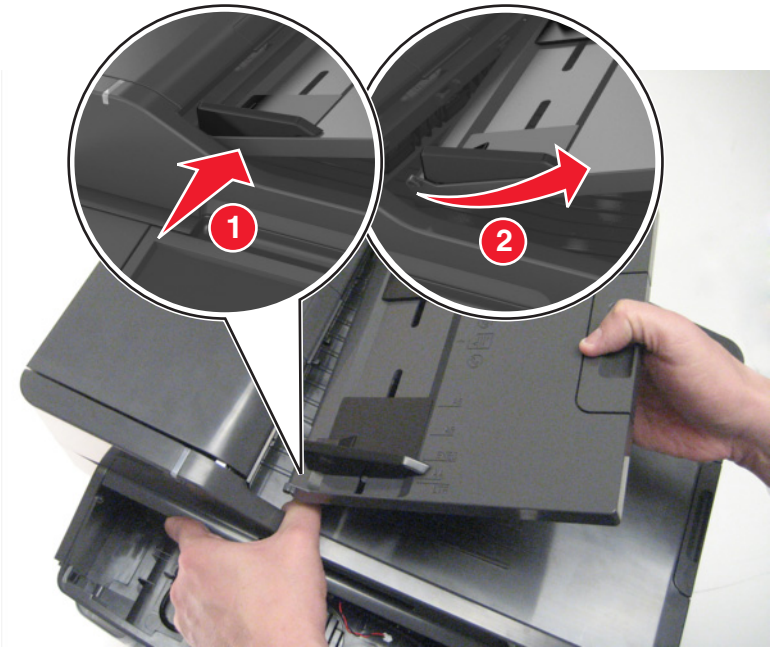

ADF unit removal

1 Open the ADF unit with one hand.

2 Insert a flat-blade screwdriver into the slot, and release the tab fastening the ADF harness cover to the ADF unit.

3 Disconnect the blade fastener (A) holding the ground cable to the ADF relay board.

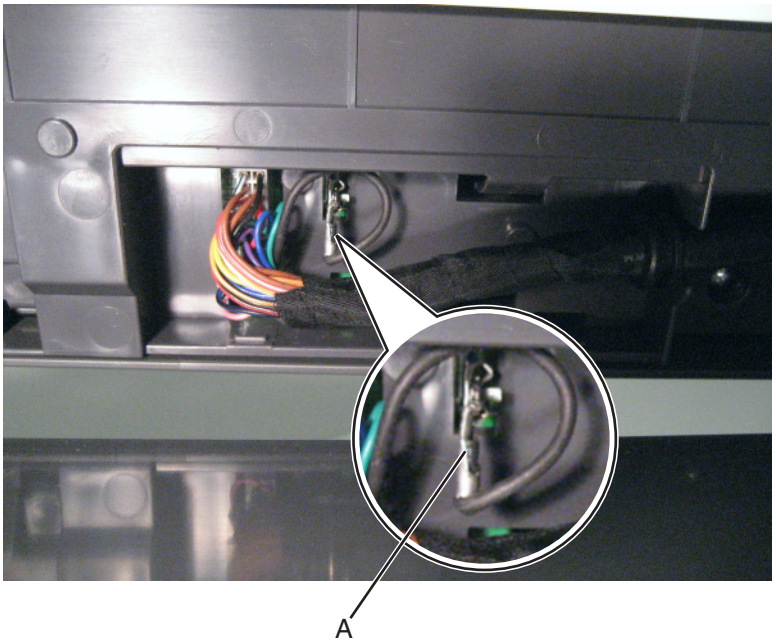

4 Disconnect the ADF cable (B) from the ADF unit.

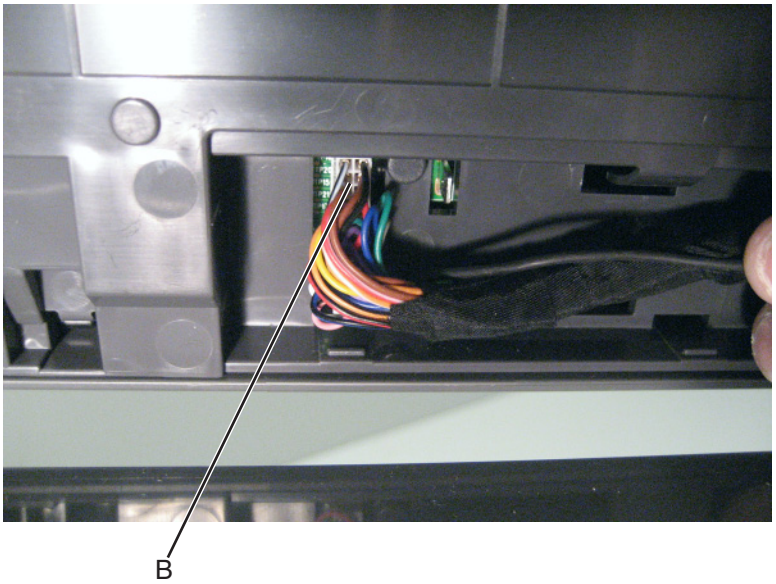

5 Route the cable off the ADF unit.

6 Slightly lift the ADF, and use a flat-blade screwdriver to press the tab on the right hinge, releasing it from the flatbed unit.

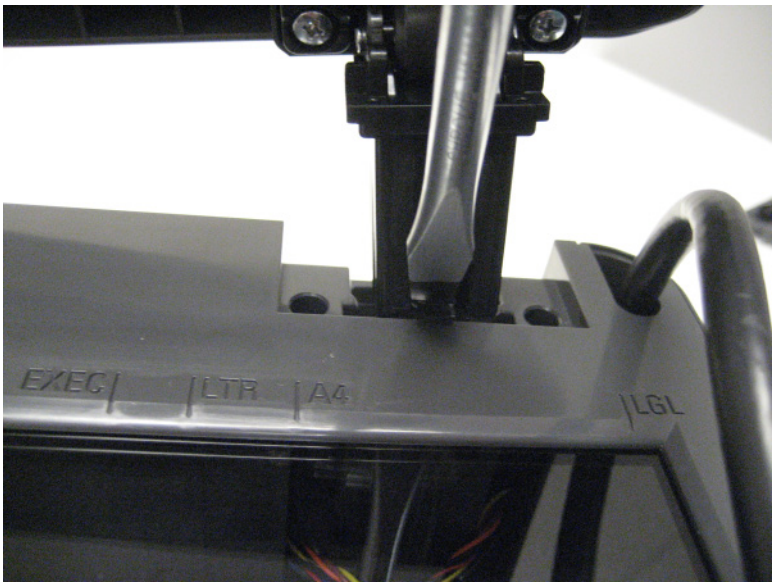

7 Remove the ADF unit.

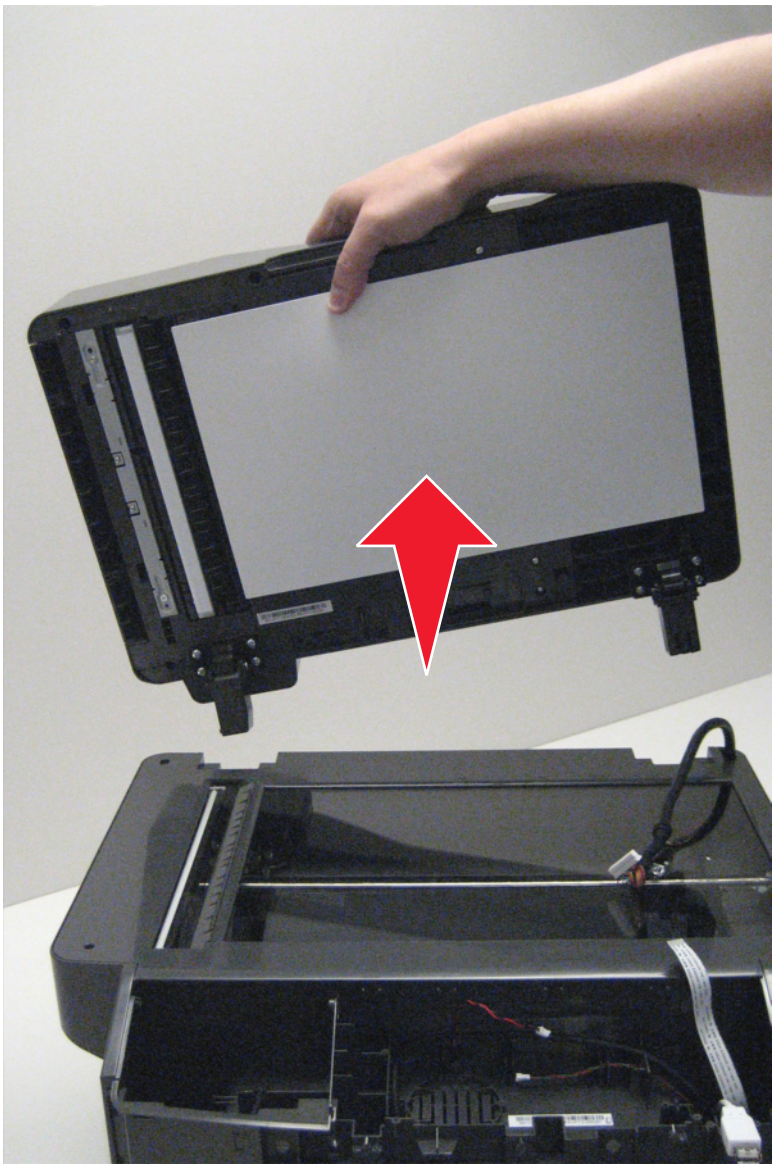

Installation note: After the new ADF is installed, perform scanner manual registration, see **"Scanner manual registration" on page 178** and scanner calibration, see **"Scanner calibration" on page 155**.

Scanner assembly removal

1 Remove the rear cover. See **"Rear cover removal" on page 302**.

2 Open the front access cover.

3 Remove the left cover. See **"Left cover removal" on page 209**.

4 Remove the right cover. See **"Right cover removal" on page 226**.

5 Remove the RIP shield from the printer frame assembly. See **"Controller board shield removal" on page 234**.

6 Disconnect the following cables from the RIP board: ADF ground, ADF cable, CIS cable, control panel cable, paper length sensor cable, and flatbed motor cable.

7 Disconnect the two cables (A) from the RIP board.

8 Remove the two screws (B), and then set the fan aside to access the screw underneath.

9 Remove the screw (C) securing the rear right side of the scanner assembly to the printer frame.

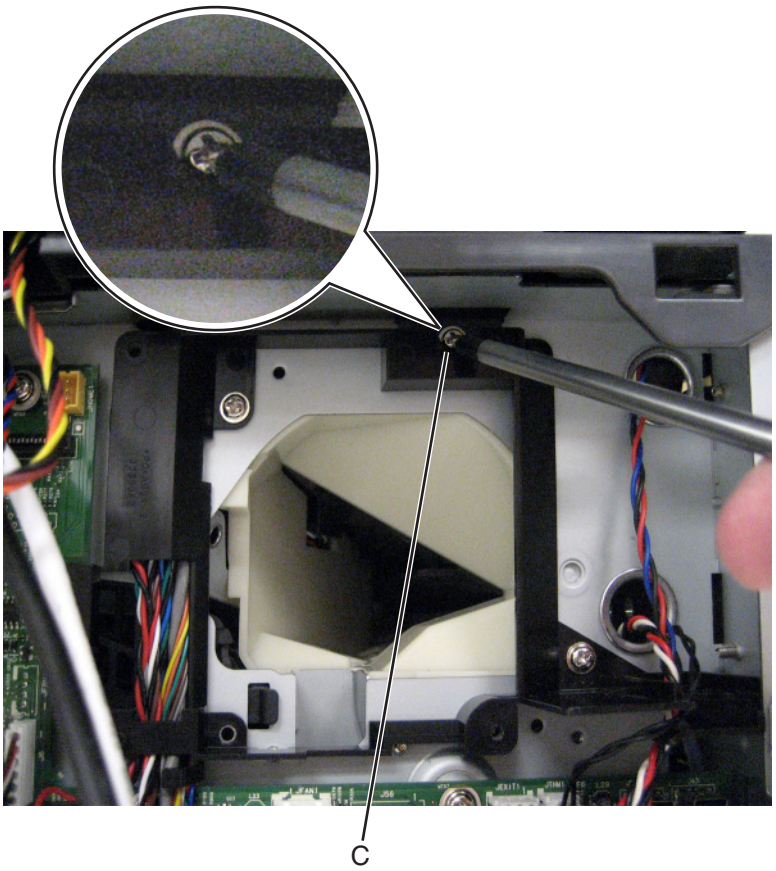

10 Remove the screw securing the rear left side of the scanner assembly to the printer frame.

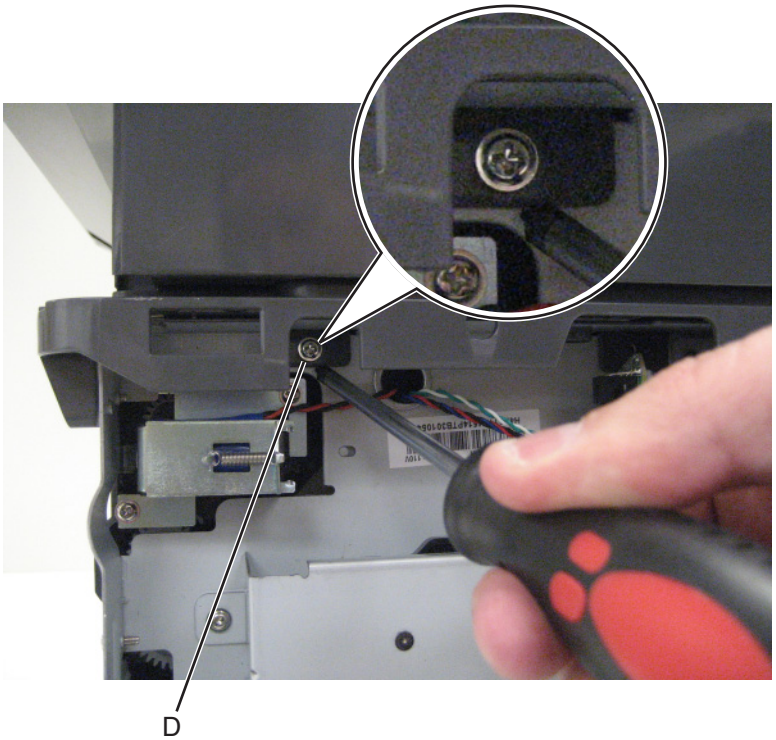

11 Remove the two screws (E) securing the front side of the scanner assembly to the printer frame.

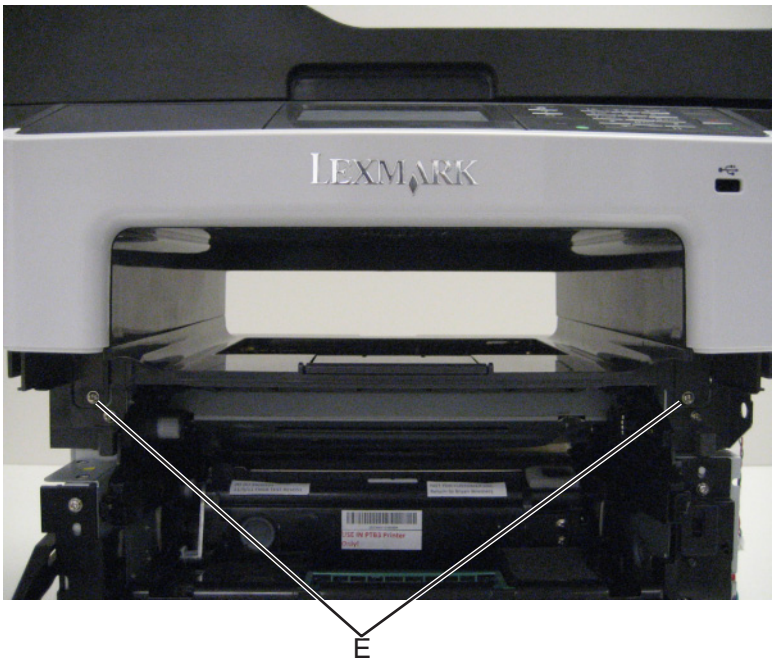

12 Lift the scanner assembly, and remove.

ADF top cover assembly

1 Open the ADF top cover.

Note: Pay attention to the original position of the top cover.

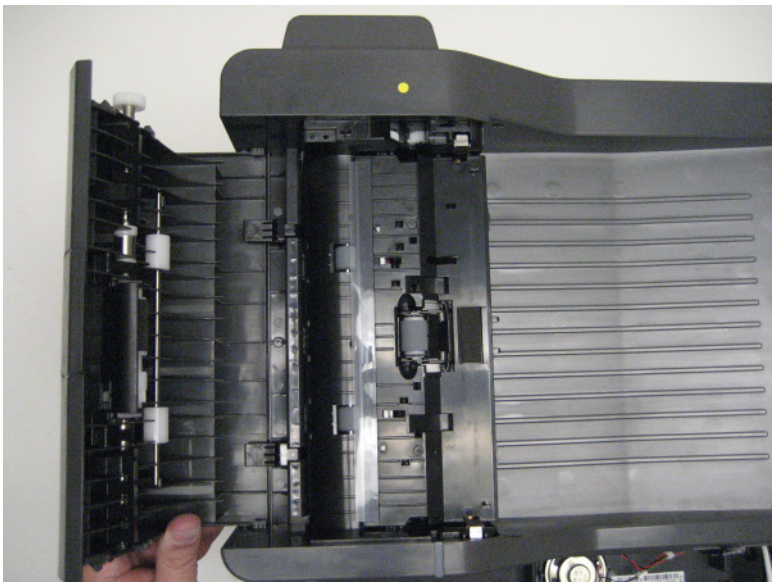

2 Release the cover by gently bending the ADF away from the top cover (1), and then lift the top cover (2) and remove.

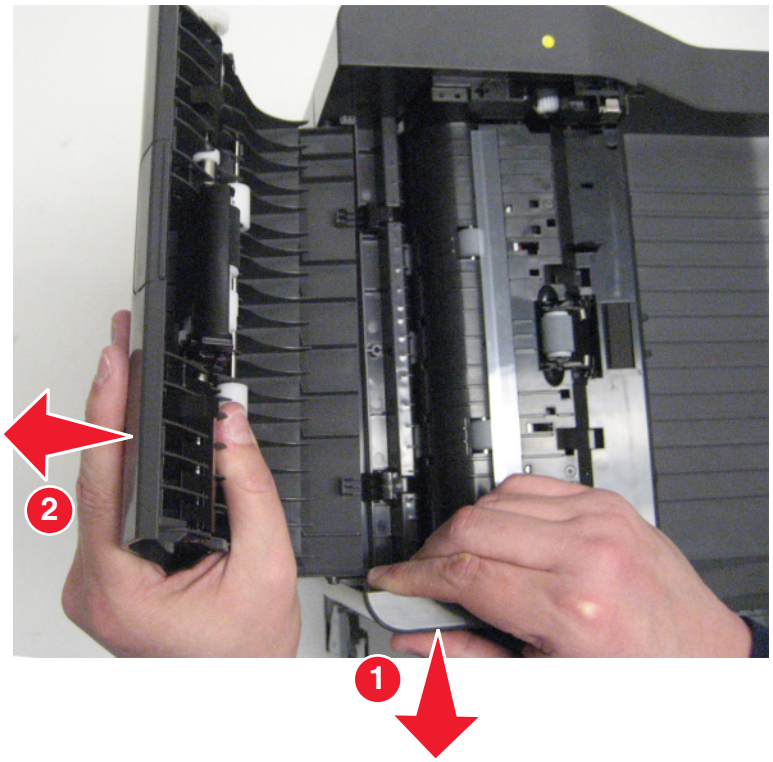

ADF cable removal

1 Remove the ADF unit. See **“ADF unit removal” on page 316**.

2 Using a flat-blade screwdriver, remove the cable cover from the rear of the scanner assembly.

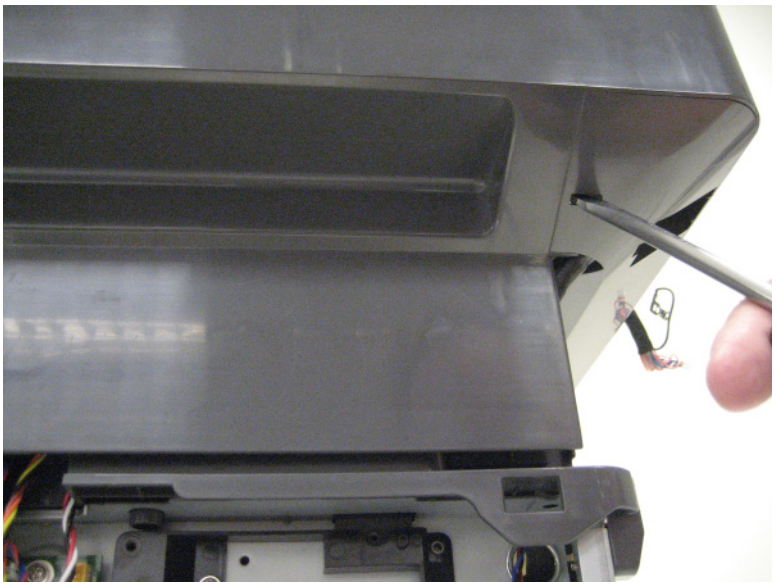

3 Remove the scanner assembly from the MFP.

4 Route the cable through the flatbed assembly, and remove it from the flatbed assembly.

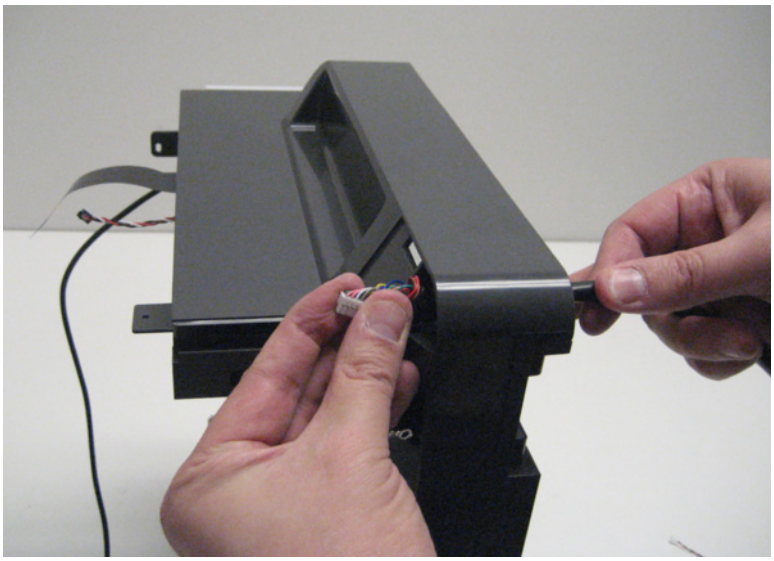

USB cable removal

1 Remove the right cover. See **“Right cover removal” on page 226**.

2 Remove the RIP board shield. See **“Controller board shield removal” on page 234**.

3 Remove the fan.

4 Disconnect the MFP wireless cable from the RIP board.

5 Remove the scanner front cover. See **“Scanner front cover removal” on page 315**.

6 Remove the control panel assembly. See **“Control panel assembly removal” on page 249**.

7 Remove the UICC drip pan.

8 Remove the USB cable bracket. See **“USB cable bracket removal” on page 254**.

9 Feed the USB cable through the channel on the left side of the printer.

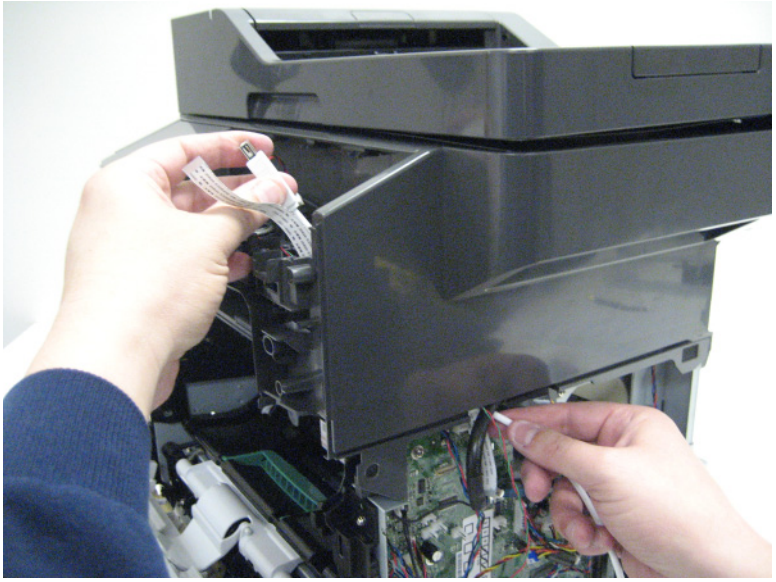

USB wireless cable removal

1 Remove the right cover. See **“Right cover removal” on page 226**.

2 Remove the RIP board shield. See **“Controller board shield removal” on page 234**.

3 Remove the fan.

4 Disconnect the MFP wireless cable from the RIP board.

5 Remove the scanner front cover. See **“Scanner front cover removal” on page 315**.

6 Remove the control panel assembly. See **“Control panel assembly removal” on page 249**.

7 Remove the UICC drip pan.

8 Lift the wireless control panel cover.

Note: For MX410 machines, two screws (A) must be removed to release the toroid from the cable.

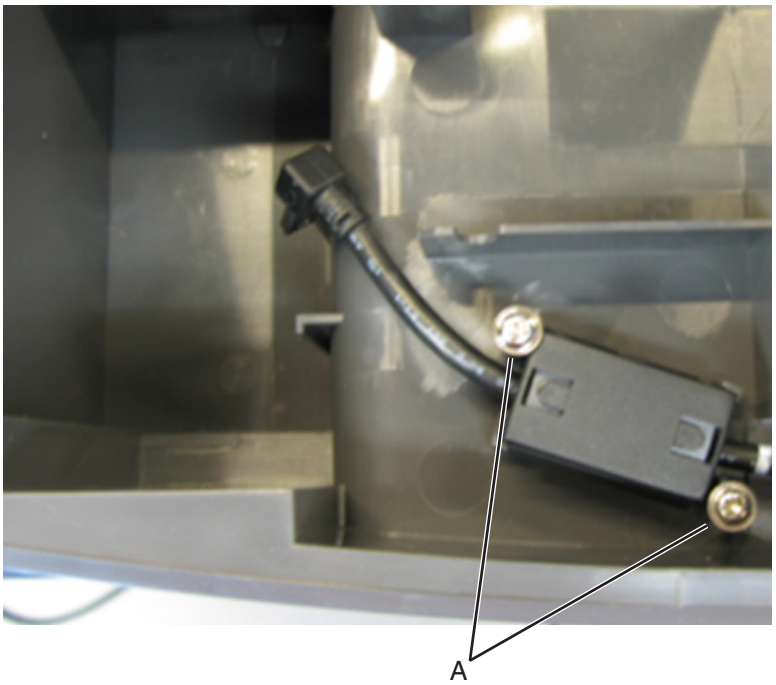

9 Feed the wireless cable through the channel on the left side of the printer.

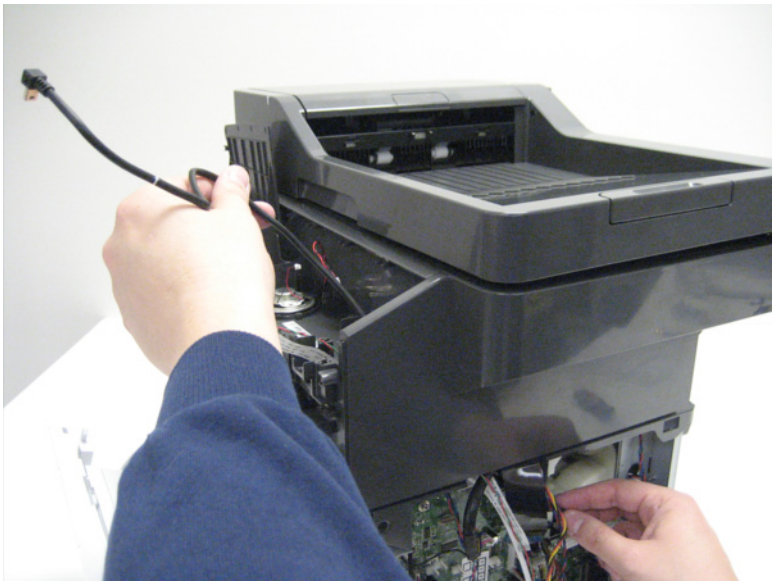

ADF hinge removal

Note: The removal shown is for the left ADF hinge. The right ADF hinge is removed in a similar manner.

1 Remove the ADF assembly. See **"ADF unit removal" on page 316**.

2 Remove the four screws (A) securing the ADF hinge to the ADF assembly.

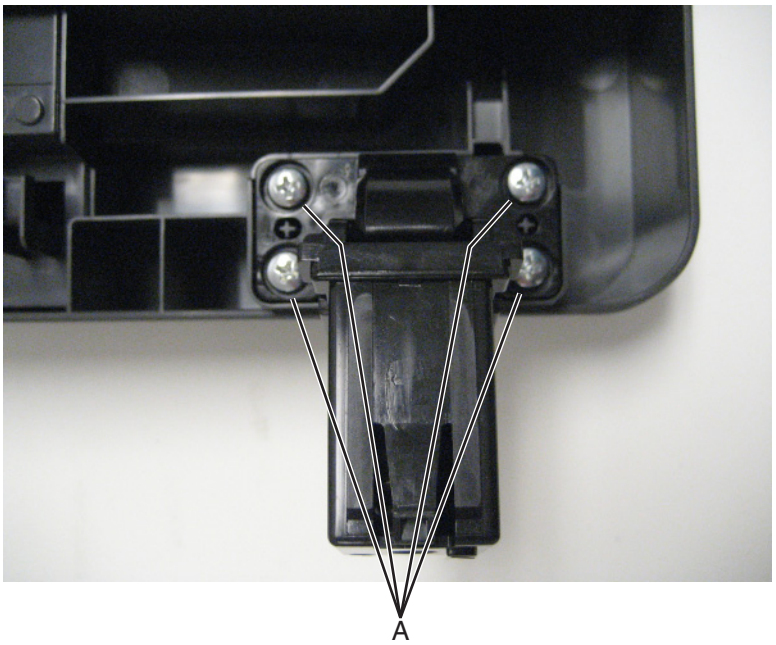

Flatbed assembly removal

1 Remove the ADF assembly. See **"ADF unit removal" on page 316**.

2 Remove the scanner assembly from the MFP. See **"Scanner assembly removal" on page 319**.

3 Remove the operator panel assembly. See **"Control panel assembly removal" on page 249**.

4 Remove the ADF cable. See **"ADF cable removal" on page 324**.

5 Remove the USB wireless cable. See **"USB wireless cable removal" on page 325**.

6 Remove the control panel USB cable. See **"USB cable removal" on page 324**.

7 Remove the speaker cable. See **"Speaker cable removal" on page 328**.

8 Remove the wireless control panel cover.

Control panel ribbon cable removal

1 Remove the left cover. See **"Left cover removal" on page 209**.

2 Remove the scanner front cover. See **"Scanner front cover removal" on page 315**.

3 Remove the three screws (A) securing the control panel assembly to the scanner assembly.

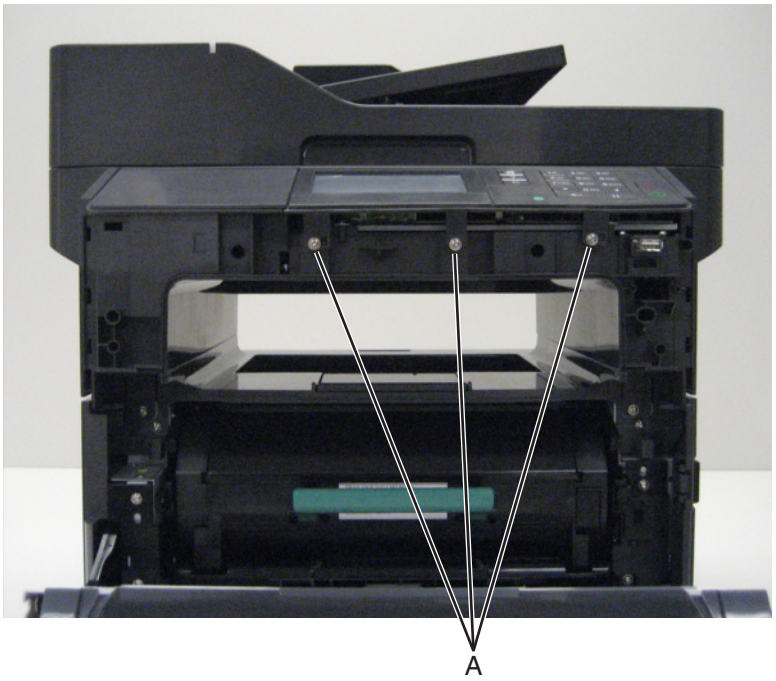

4 Lift the control panel assembly, disconnect the ribbon cable (JUICC1) from the UICC card, and then feed the ribbon cable through the wire channel.

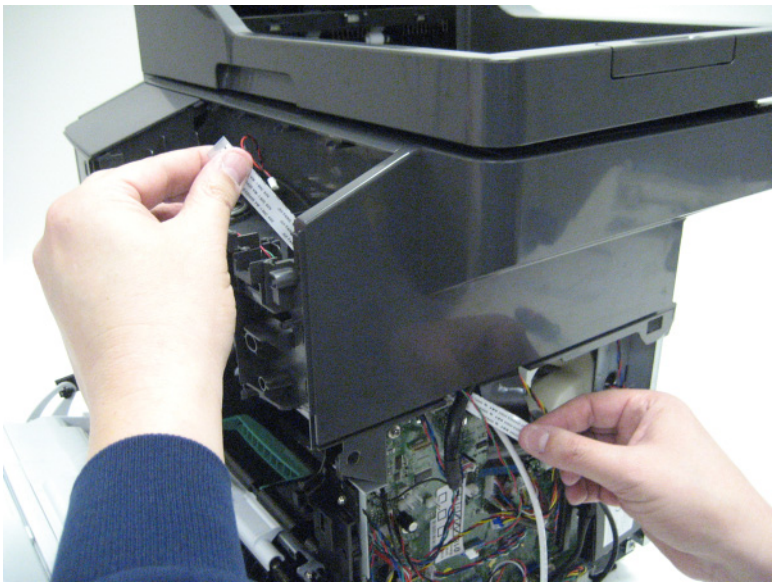

Speaker cable removal

1 Remove the left cover. See **"Left cover removal" on page 209**.

2 Remove the controller board shield. See **"Controller board shield removal" on page 234**.

3 Remove the fan.

4 Remove the scanner front cover. See **"Scanner front cover removal" on page 315**.

5 Remove the control panel assembly. See **“Control panel assembly removal” on page 249**.

6 Remove the UICC drip pan.

7 Disconnect the speaker cable from the controller board.

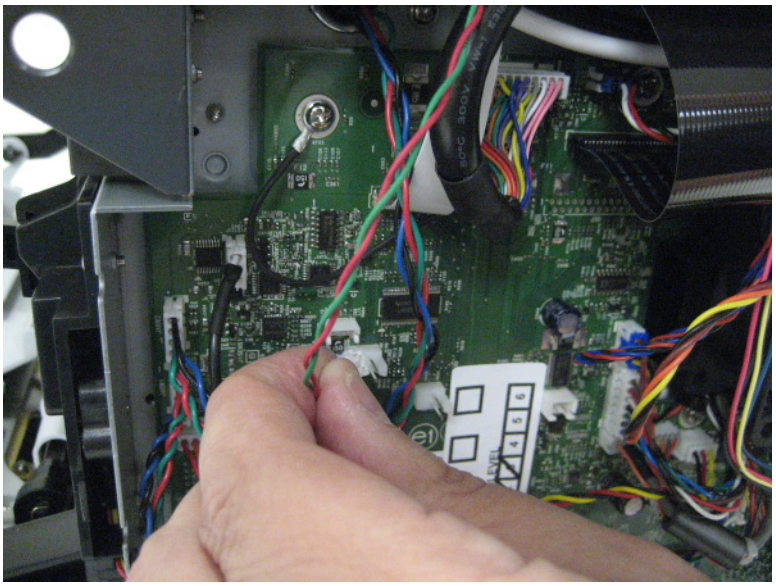

8 Disconnect the speaker cable from the speaker.

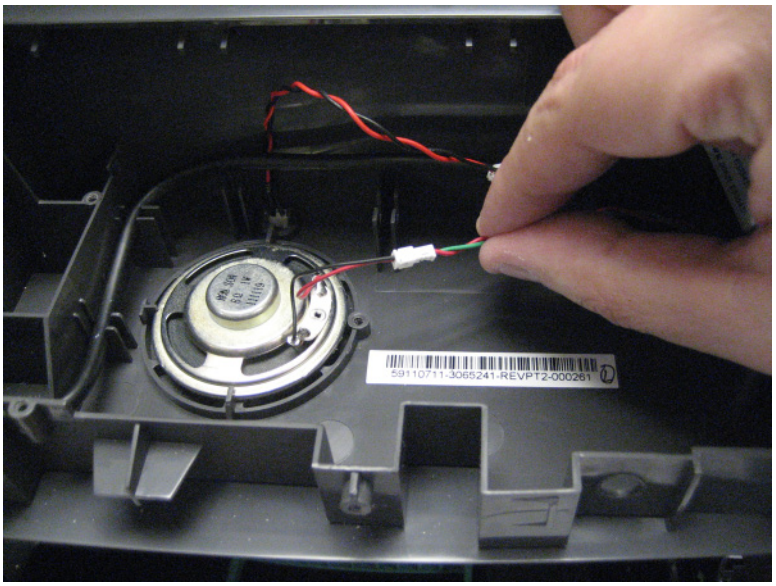

9 Feed the speaker cable through the channel on the right side of the printer.

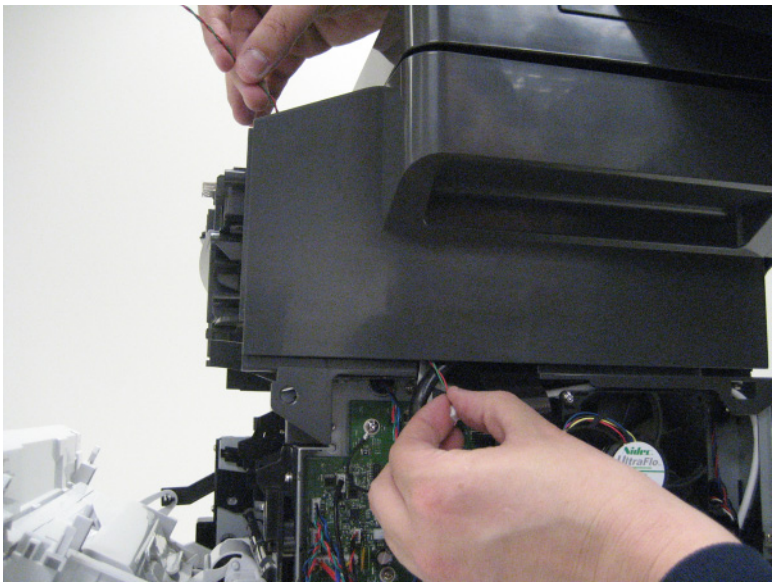

Cave light cable removal

1 Remove the scanner front cover. See **"Scanner front cover removal" on page 315**.

2 Remove the control panel assembly. See **"Control panel assembly removal" on page 249**.

3 Remove the UICC drip pan.

4 Carefully open the tabs (A), and remove the cave light LED from the scanner assembly.

Warning—Potential Damage: These tabs are fragile and can break if opened too far.

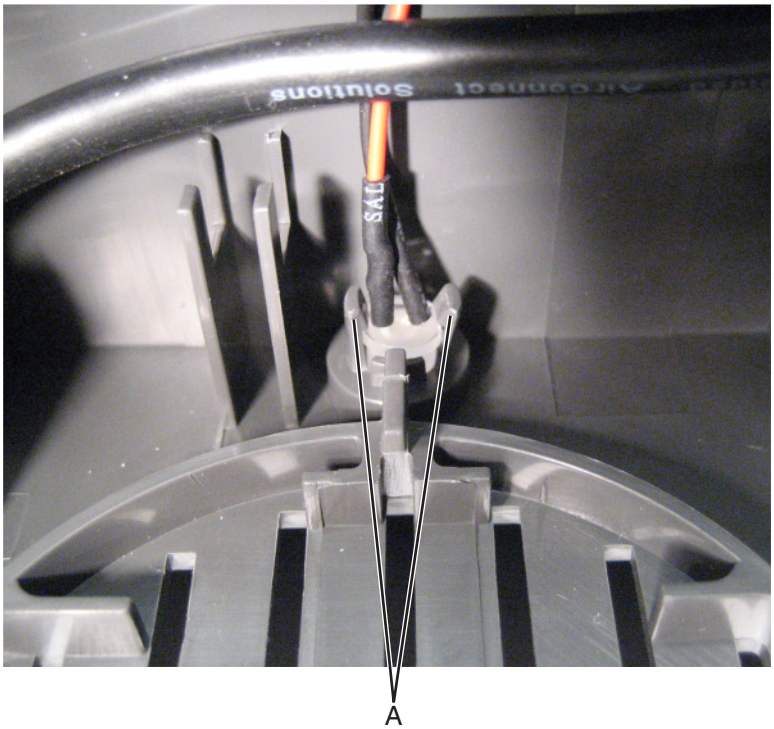

Restraint pad removal

1 Open the ADF top cover.

2 Peel the restraint pad off of the ADF top cover. Be sure that any excess adhesive or pieces of pad are removed from the ADF top cover to avoid misfeeds.

Warning—Potential Damage: Be sure that any excess adhesive or pieces of pad are removed from the ADF top cover to avoid misfeeds. Do not use solvents to remove the residue. This will damage the plastic.

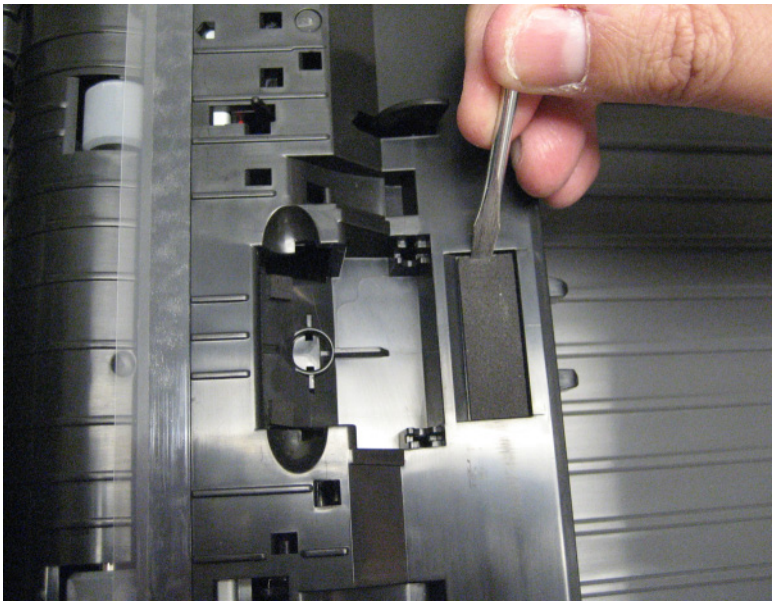

250/550-sheet option tray removals

Pick roller removal

Press the latches, and then remove the pick roller.

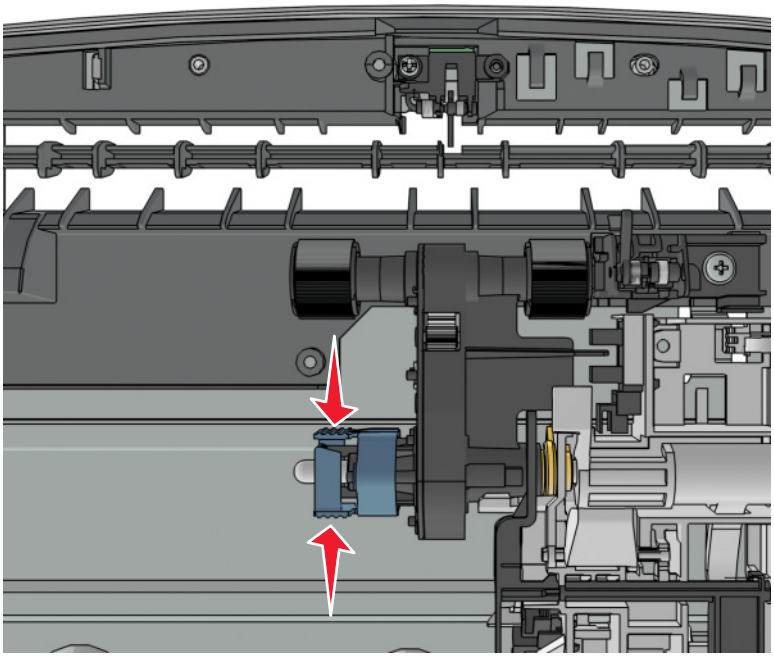

Separator roll assembly removal

1 Remove the screw (A) from under the tray insert.

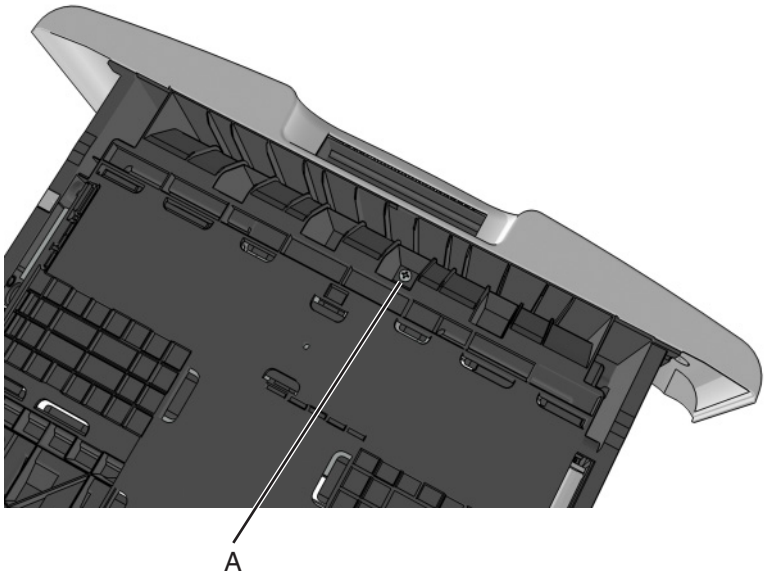

2 Remove the E-clip, and then remove the gear.

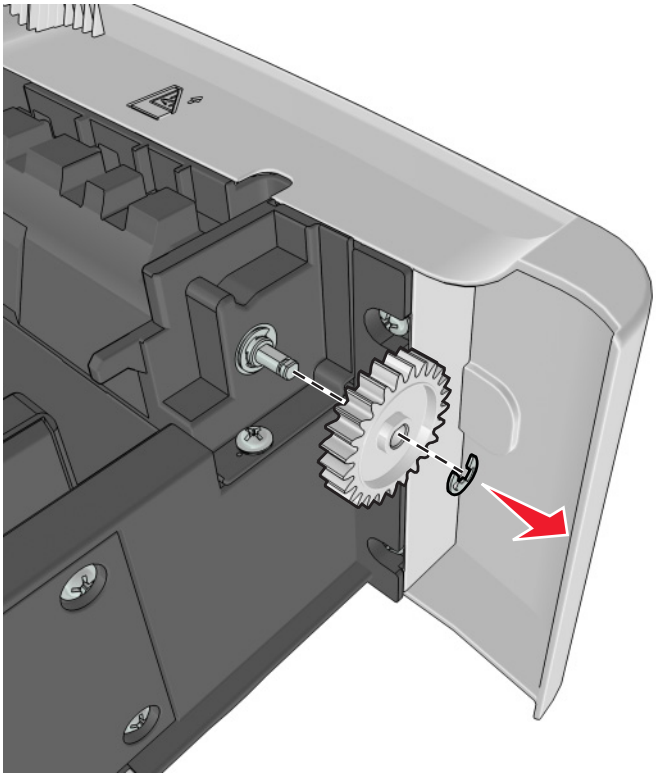

3 Remove the four screws (B).

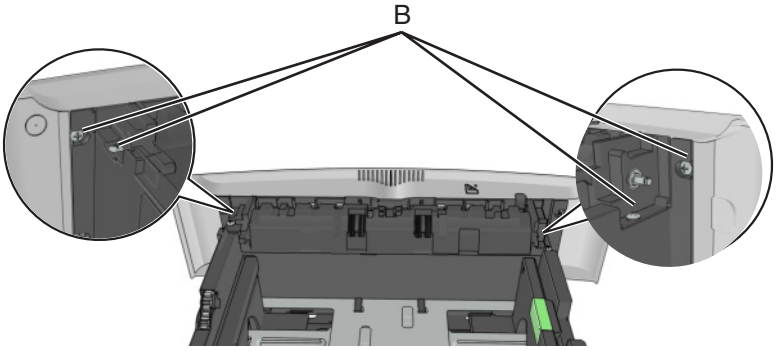

4 Push out the top part of the drawer cover, and then remove the separator roll assembly.

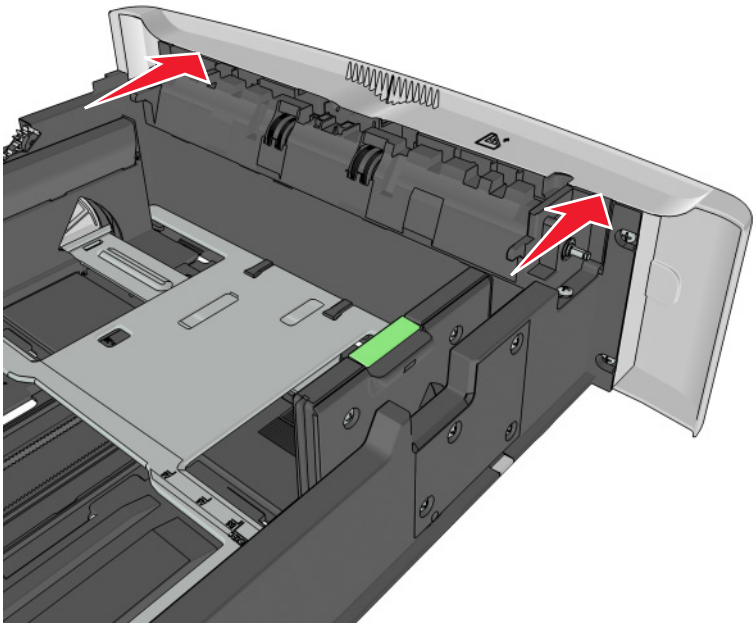

ACM assembly removal

1 Remove the seven screws (A), and release the two latches (B) from the top of the drawer.

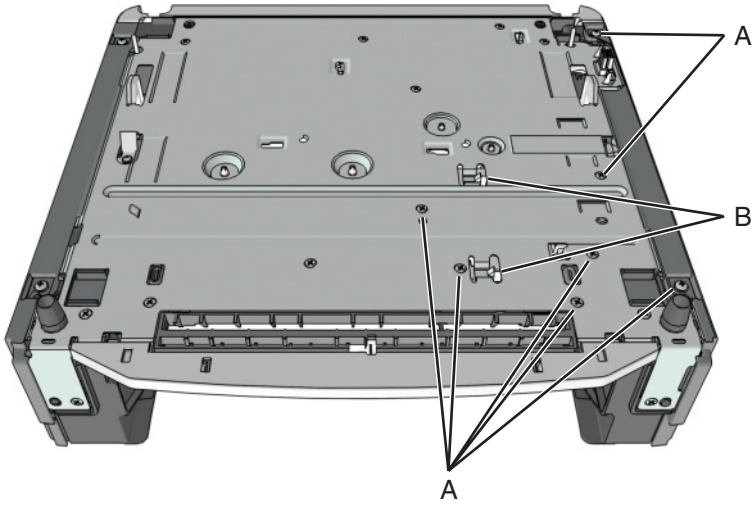

2 Remove the two screws (C), and then release the two latches under the screws.

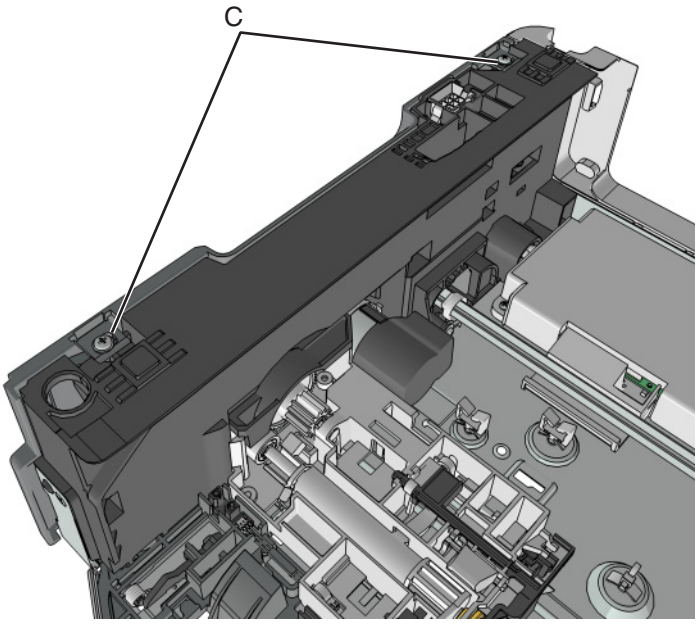

3 Swing the right cover backward to remove.

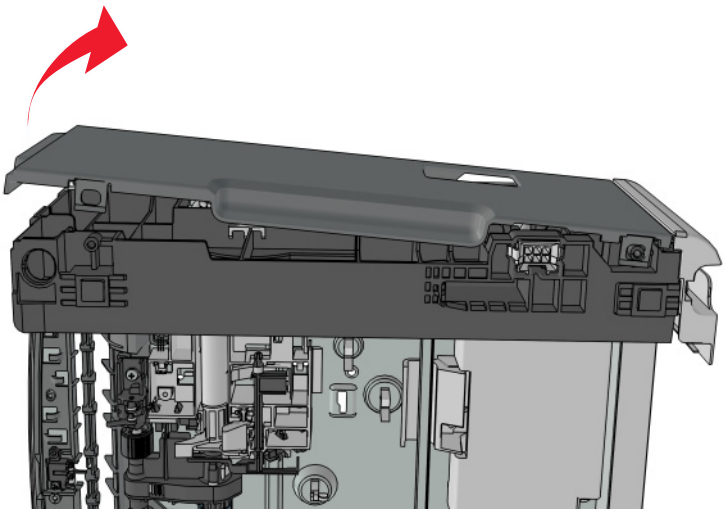

4 Remove the screw (D).

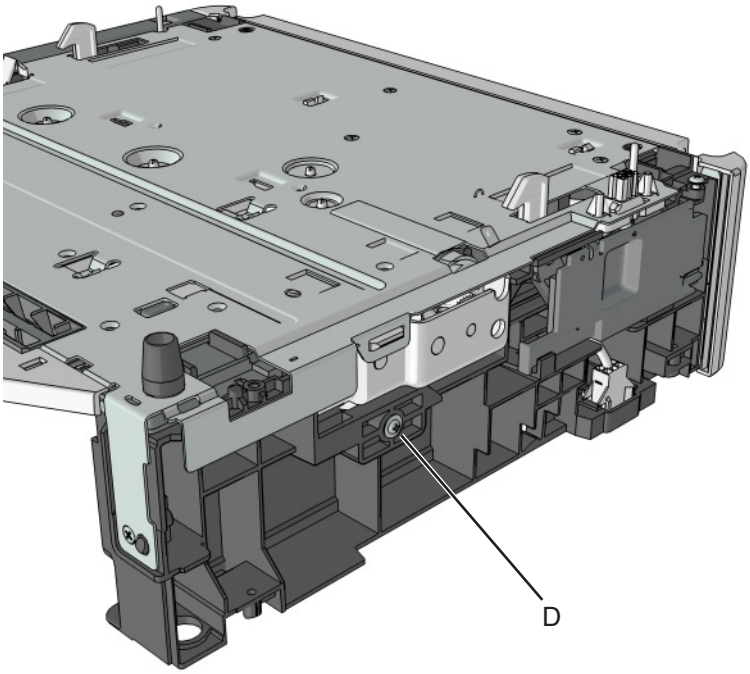

5 Disconnect the spring (E).

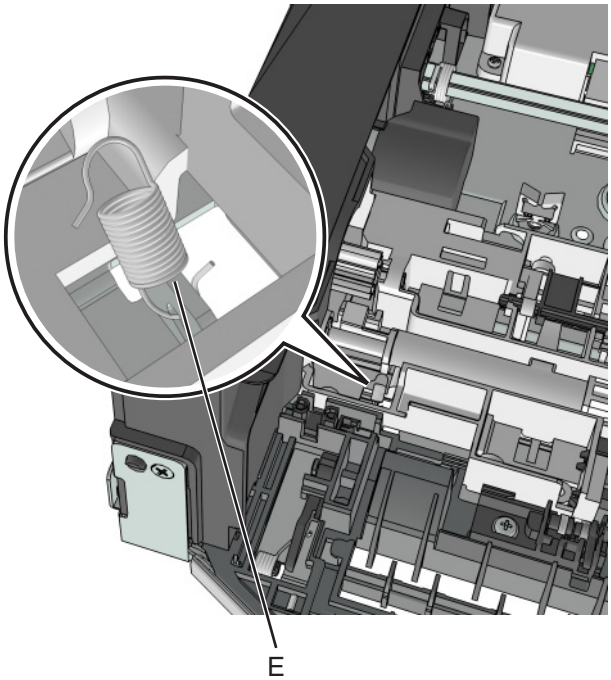

6 Remove the two screws (F), and then remove the controller card cover.

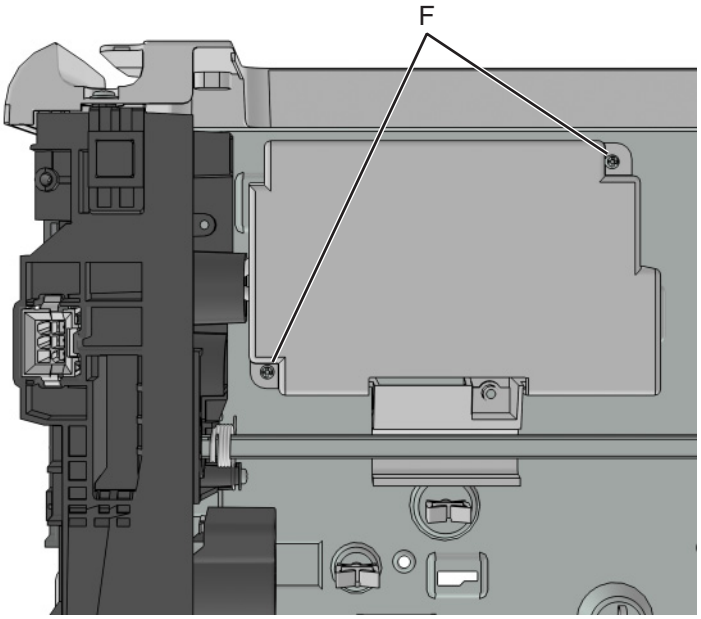

7 Disconnect the cable J11 from the controller card.

8 Unroute the cable, and then remove the ACM assembly.

Component locations

Exterior locations

Front view

Printer configurations

CAUTION—TIPPING HAZARD: Floor-mounted configurations require additional furniture for stability. You must use either a printer stand or printer base if you are using a high-capacity tray and an input option, or more than one input option. If you purchased a multifunction printer (MFP) that scans, copies, and faxes, you may need additional furniture. For more information, see **www.lexmark.com/multifunctionprinters**.

You can configure your printer by adding an optional 250- or 550-sheet tray.

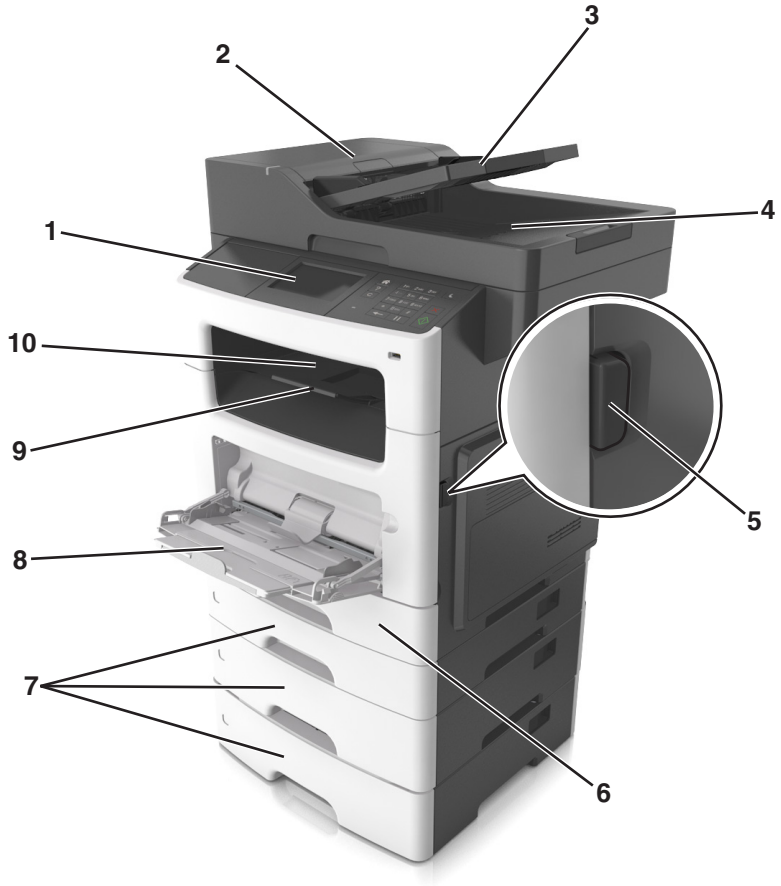

1	Printer control panel
2	Automatic document feeder (ADF)
3	ADF tray
4	ADF bin

5	Front door release button
6	Standard 250-sheet tray
7	Optional 250- or 550-sheet tray **Note:** The MX410de printer model supports only one optional 250- or 550-sheet tray.
8	100-sheet multipurpose feeder **Note:** The MX410de printer model supports only a 50-sheet multipurpose feeder.
9	Paper stop
10	Standard bin

Rear view

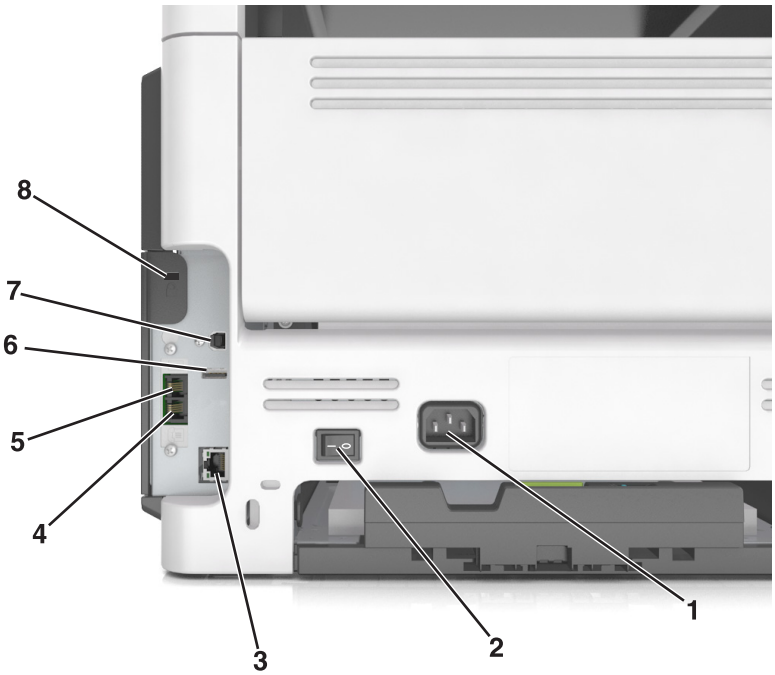

	Part name
1	Printer power cord socket
2	Power switch
3	Ethernet port
4	EXT port
5	LINE port
6	USB port **Note:** This port is not supported for the MX310 models.
7	USB printer port
8	Security slot

Connectors

Controller board

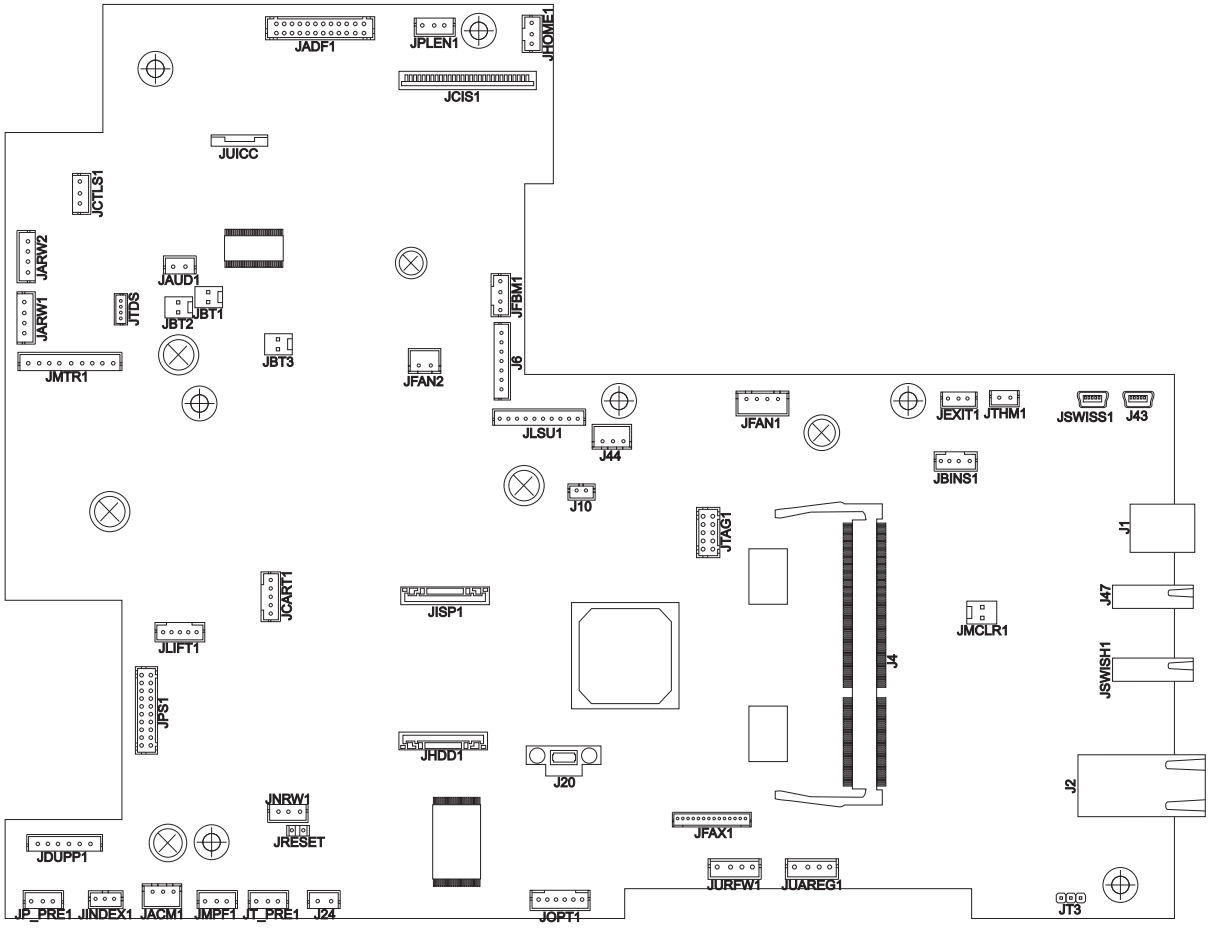

Connector	Connects to	Pin no.	Signal
J10	Duplex solenoid	1	+24V
		2	V_DPRSOL
J2	Ethernet outlet	N/A	Ethernet connection—can't be probed
J24	MPF solenoid	1	V_MPT+
		2	V_MPT-
J43	Thumb drive front USB host (mini type)	1	M1
		2	USB_DM1
		3	USB_DP1
		4	
		5	GND

Connector	Connects to	Pin no.	Signal
J44	Sensor (cover interlock)	1	V24_33V_LD
		2	+5V_OPEN
		3	GND
J47	Back USB host port (type A, tall, narrow)	1	VBUSB
		2	SUB_DM2
		3	USB_DP2
		4	GND
J6	LSU, drive and H sync	1	PH_TH_0
		2	V24_33v_LD
		3	PH_TH_1N
		4	GND
		5	V12_DRIVE_OUT0
		6	GND
		7	V12_DRIVE_OUT1
JACM1	Sensor (ACM)	1	+5V_ENG_SW
		2	S_ACM_SEN_C
		3	GND

Connector	Connects to	Pin no.	Signal
JADF1	ADF	1	PAP_PRES_ADFR
		2	FEED_DIR_ADFR
		3	STAGE_ADFR
		4	FEED_PWM_ADFR
		5	FEED_ADFR
		6	VREF_ADFR
		7	DUPLEX_ADFR
		8	PICK_DIR_ADFR
		9	COVER_FBR
		10	PICK_PWM_ADFR
		11	COVER_ADFR
		12	NFAULT_8812_ADFR
		13	SKEW_ADFR
		14	+24V_ADF
		15	+3.3V_MAIN_ADF
		16	+24V_ADF
		17	GND
		18	GND
		19	PICK_ENCX_ADFR
		20	FEED_ECY_ADFR
		21	FEED_ECX_ADFR
		22	+3.3V_WAKE_ADF
		23	GND
		24	PICK_ENCY_ADFR
JBINS1	Sensor (bin full)	1	+3.3V_ENG_SW
		2	PAPER_FULL
		3	GND
		4	GND
JCART	Cartridge motor	1	V_5VCART
		2	S_CART_ENG_C
		3	GND
		4	V_CART_MP_C
		5	V_CART_MM_C

Connector	Connects to	Pin no.	Signal
JDUPP1	Sensor (duplex) Sensor (input)	1	V3.3V_DUPLEX
		2	S_DUPLEX_C
		3	GND
		4	V3.3V_PAPER_IN
		5	S_PAPER_IN_C
		6	GND
JEXIT1	Sensor (fuser exit)	1	V_3.3_PAPER_OUT
		2	S_PAPER_OUT_C
		3	GND
JFAN1	Cooling fan	1	GND
		2	FAN_HC
		3	FAN_FB
		4	GND
JFBM1	Flatbed motor	1	FBM_A-
		2	FBM_A+
		3	FBM_B+
		4	FBM_B-
JHOME	Sensor (flatbed home position)	1	+5v_HOME
		2	GND
		3	HOME_FBR
JINDEX1	Sensor (index)	1	V3.3_INDEX
		2	S_INDEX_C
		3	GND
JLSU1	LSU, video	1	LDEN_C
		2	SHADE_C
		3	VDO_ADJ_C
		4	GND
		5	LPOWER_C
		6	BOOST_C
		7	GND
		8	VIDEO-_C
		9	VIDEO+_C
		10	GND

Connector	Connects to	Pin no.	Signal
JMPFP1	Sensor (MPF)	1	+3.3_ENG_SW
		2	S_MPF_PP_C
		3	GND
JMTR1	Main motor	1	HALL_U_C
		2	HALL_V_C
		3	HALL_W_C
		4	FG_C
		5	GND
		6	+5_MOTFUSE
		7	V_C1_U
		8	V_C1_V
		9	V_C1_W
JOPT1	Options	1	VS24_FUSE_OPT
		2	J_OPT_TXR
		3	J_INPUT_FDT
		4	J_OPT_RXR
		5	GND
		6	VS24_OPT_5V
JPLEN1	Sensor (flatbed paper length)	1	GND
		2	LENGTH_FBR
		3	+5V_LENGTH

Connector	Connects to	Pin no.	Signal
JPS1	HVPS/LVPS	1	CHARGE_C
		2	SERVO_OUT_C
		3	DEV_C
		4	TXENABLE_C
		5	TX_C
		6	FUSER_RELAY
		7	HVPS_ON_C
		8	FUSER_ON_C
		9	ZEROX_C
		10	SHUTOFF_24V
		11	+5V_CONT
		12	GND
		13	+5V_CONT
		14	GND
		15	+5V_CONT
		16	GND
		17	+24V
		18	GND
		19	+24V
		20	GND
JSWISH1	Back USB host port (type A, tall, narrow)	1	SWISS_5V
		2	USB_DM_SWISSH
		3	USB_DPP_SWISSH
		4	GND
JT_PRE1	Sensor (tray present)	1	V_3.3_TRAY1
		2	S_TRAY1_C
		3	GND
JTHM1	Fuser thermistor	1	FUSER_TH_C
		2	GND

Power supply

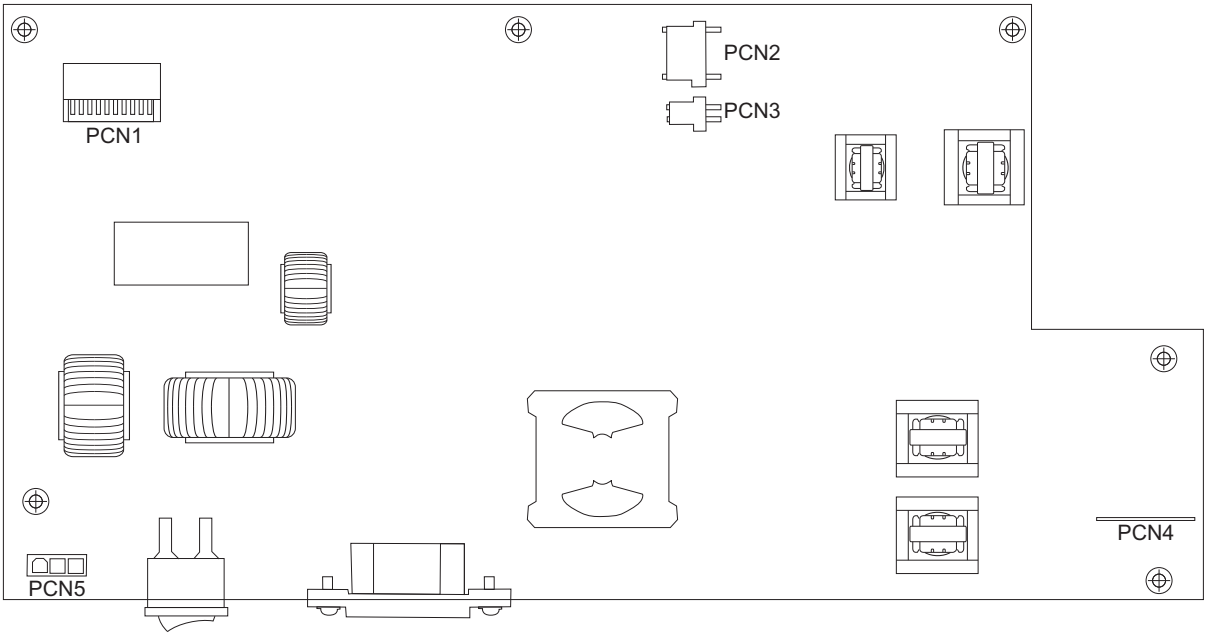

Maintenance

Inspection guide

The purpose of this inspection guide is to aid you in identifying the intervals, based on page count, at which parts must be inspected (for visible physical damage), cleaned, or replaced.

If any unsafe conditions exist, find out how serious the hazard could be and if you can continue before you correct the hazard.

As you service the machine, check for the following:

- Damaged, missing, or altered parts, especially in the area of the On/Off switch and the power supply
- Damaged, missing, or altered covers, especially in the area of the top cover and the power supply cover
- Possible safety exposure from any non-Lexmark attachments

Use the following table to determine when specified parts should be inspected:

	EVERY SERVICE CALL	EVERY 100K	EVERY 200K	EVERY 400K	NOTES
MEDIA TRAY—ALL					
Tray insert	Inspect	Inspect	Inspect	Replace	
Media side guides	Inspect	Inspect	Inspect		Check for correct positioning.
Media end guide	Inspect	Inspect	Inspect		Check for correct positioning.
Separation pad	Inspect	Clean	Clean		Damp cloth
Tray lift gear assembly		Inspect	Inspect		
Separation roller	Inspect	Inspect	Replace		Verify page count before replacing.
MEDIA FEEDERS—ALL					
Pick roller	Inspect	Inspect	Replace	Replace	Verify page count before replacing.
MPF feed rollers	Inspect	Inspect	Replace	Clean	Water or alcohol
Sensor		Clean	Clean	Clean	Brush or blower brush
TRANSFER ROLL					
Transfer roll	Inspect	Inspect	Replace	Replace	
FUSER UNIT					
Fuser unit	Inspect	Inspect	Replace	Inspect	
Sensor (fuser exit)		Clean	Clean	Clean	Blower brush
REDRIVE ASSEMBLY					
Redrive assembly		Inspect	Replace		Water

	EVERY 90K	EVERY 200K	NOTES
ADF ASSEMBLY			
ADF separator roll		Replace	
ADF restraint pad			Replace if dirty, or if the ADF is shingle feeding.

Scheduled maintenance

The control panel displays an 80.xy error when it reaches 200K page counts. It is necessary to install the appropriate maintenance kit to maintain the print quality and reliability of the printer. Reset the maintenance counter after replacing the maintenance kit.

Maintenance kits

Part number and kit	Contents
40X9146—Maintenance Kit (100 V)	• Fuser (100V) • Redrive assembly • ACM tires/hubs • Transfer roll • Tray separator bracket • MPF pick roll and separator pad
40X9135—Maintenance Kit (110 V)	• Fuser (110V) • Redrive assembly • ACM tires/hubs • Transfer roll • Tray separator bracket • MPF pick roll and separator pad
40X9136—Maintenance Kit (220 V)	• Fuser (220V) • Redrive assembly • ACM tires/hubs • Transfer roll • Tray separator bracket • MPF pick roll and separator pad

When performing the 200K scheduled maintenance procedure, the following areas should be cleaned of media dust and toner contamination:

- Media trays
- Imaging unit area
- Transfer roll area
- Duplex area
- Standard bin

Resetting the maintenance counter

Always reset the maintenance counter after installing the maintenance kit.

To reset the maintenance counter:

1. POR into the Configuration menu, and navigate to **Reset Maintenance Counter**.
2. Depending on the printer model, press **OK** or touch to reset the counter, or press **X** to exit without resetting the counter.

Once initiated, the operation cannot be canceled.

Lubrication specification

Lubricate only when parts are replaced or as needed, not on a scheduled basis. Use of lubricants other than those specified in this service manual can cause premature failure. Some unauthorized lubricants might chemically attack polycarbonate parts. Use Grease P/N 99A0394 Nyogel 744.

Cleaning the printer

Note: You may need to perform this task after every few months.

Warning—Potential Damage: Damage to the printer caused by improper handling is not covered by the printer warranty.

1. Make sure that the printer is turned off and unplugged from the electrical outlet.

   CAUTION—SHOCK HAZARD: To avoid the risk of electrical shock when cleaning the exterior of the printer, unplug the power cord from the electrical outlet and disconnect all cables from the printer before proceeding.
2. Remove paper from the standard bin and multipurpose feeder.
3. Remove any dust, lint, and pieces of paper around the printer using a soft brush or vacuum.
4. Dampen a clean, lint-free cloth with water, and use it to wipe the outside of the printer.

   Warning—Potential Damage: Do not use household cleaners or detergents to prevent damage to the exterior of the printer.
5. Make sure all areas of the printer are dry before sending a new print job.

Cleaning the scanner glass

Clean the scanner glass if you encounter print quality problems, such as streaks on copied or scanned images.

1 Slightly dampen a soft, lint-free cloth or paper towel with water.

2 Open the scanner cover.

3 Clean all the areas shown, and then let them dry.

1	White underside of the scanner cover
2	Scanner glass
3	ADF glass
4	White underside of the ADF cover

4 Close the scanner cover.

Parts catalog

Legend

The following column headings are used in the parts catalog:

- **Asm-index**—Identifies the assembly and the item in the diagram. For example, 3-1 indicates Assembly 3 and item 1 in the table.
- **Part number**—Identifies the unique number that correlates with the part.
- **Units/mach**—Refers to the number of units actually used in the base machine or product.
- **Units/option**—Refers to the number of units in a particular option.
- **Units/FRU**—Refers to the number of units in a particular FRU.
- **Description**—A brief description of the part.

The following abbreviations are used in the parts catalog:

- **NS** (not shown) in the Asm-index column indicates that the part is procurable but is not pictured in the illustration.
- **PP** (parts packet) in the Description column indicates that the part is contained in a parts packet.

Assembly 1: Covers

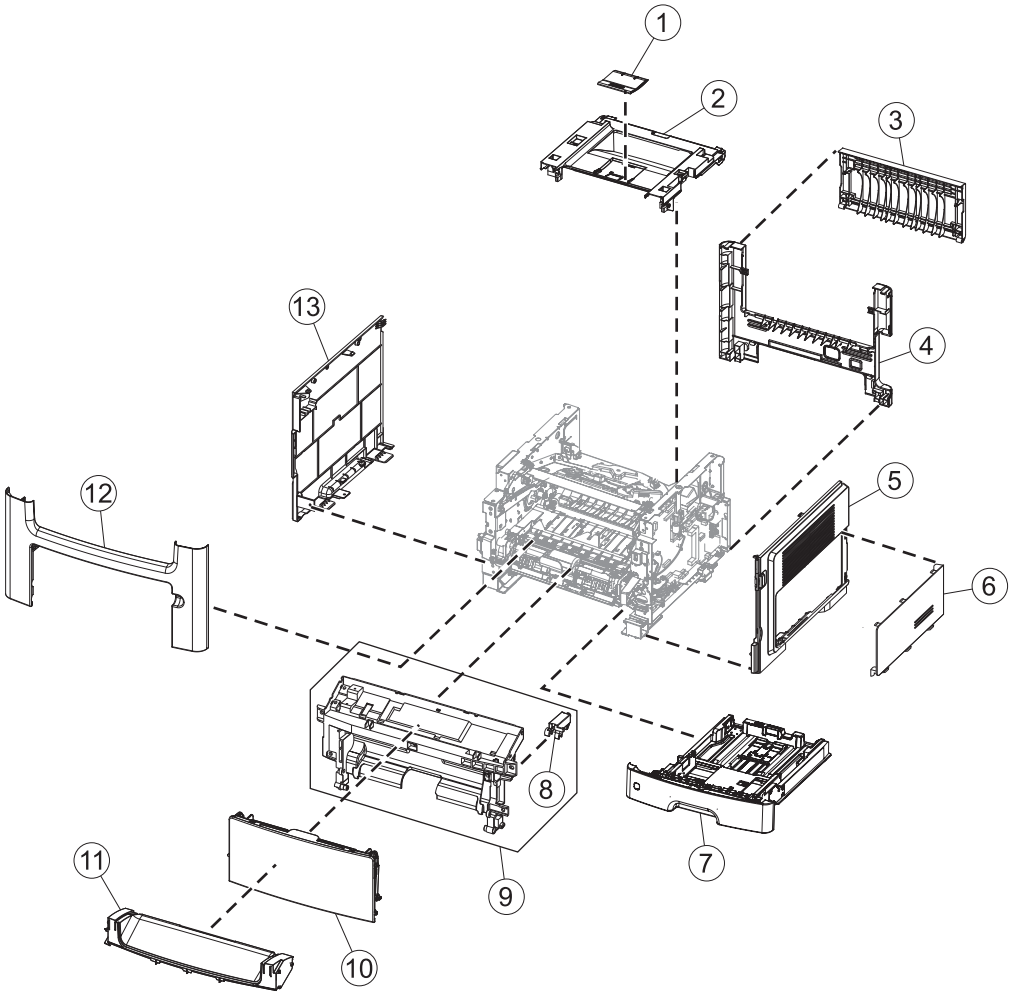

Assembly 1: Covers

Asm-index	P/N	Units/mach	Units/FRU	Description	Removal procedure
1	40X9075	1	1	Bin extender	**“Bin extender removal” on page 308**
2	40X9091	1	1	Top cover	**“Top cover assembly removal” on page 307**
3	40X9145	1	1	Rear door	**“Rear exit door removal” on page 301**
4	40X9070	1	1	Rear cover	**“Rear cover removal” on page 302**
5	40X9073	1	1	Right cover	**“Right cover removal” on page 226**
6	40X9100	1	1	Memory access door	**“Memory access door removal” on page 229**
7	40X8303	1	1	250-sheet media tray	N/A
8	40X9148	1	1	Cartridge plunger	**“Cartridge plunger removal” on page 244**
9	40X9068	1	1	MPF front access cover	**“Front access cover removal” on page 265**
10	40X9131	1	1	MPF tray	**“MPF tray removal” on page 260**
10	40X8302	1	1	MPF tray (MX31x)	**“MPF tray removal” on page 260**
11	40X9069	1	1	Front bin cover	**“Front bin cover removal” on page 248**
12	40X9071	1	1	Nameplate cover	**“Name plate cover removal” on page 246**
13	40X9072	1	1	Left cover	**“Left cover removal” on page 209**

Assembly 2: Imaging

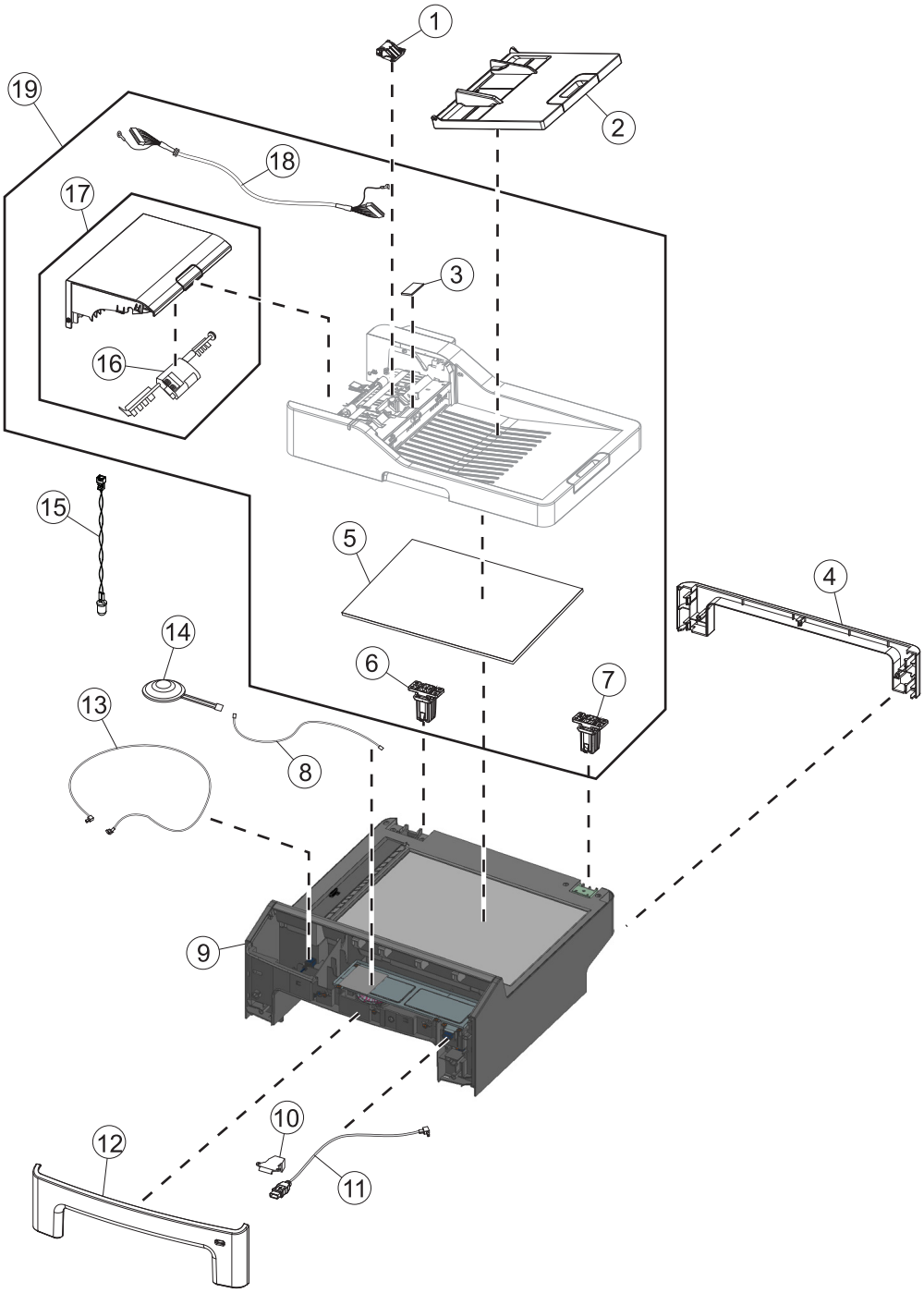

Assembly 2: Imaging

Asm-index	P/N	Units/mach	Units/FRU	Description	Removal procedure
1	40X6247	1	1	ADF separator pad (simplex)	**“ADF separator pad removal ” on page 311**
1	40X9108	1	1	ADF separator roller	**“ADF separator roll removal ” on page 312**
2	40X9054	1	1	ADF input tray	**“ADF input tray removal” on page 316**
3	40X9110	1	1	Restraint pad	**“Restraint pad removal” on page 331**
4	40X9081	1	1	Scanner rear cover (MX31x, MX41x)	**“Scanner rear cover removal” on page 315**
4	40X9128	1	1	Scanner rear cover (MX51x)	**“Scanner rear cover removal” on page 315**
5	40X9109	1	1	Flatbed cushion (MX31x, MX41x)	**“Flatbed cushion removal ” on page 314**
5	40X5804	1	1	Flatbed cushion (legal)	**“Flatbed cushion removal ” on page 314**
6	40X9129	1	1	ADF left hinge	**“ADF hinge removal” on page 327**
7	40X8734	1	1	ADF right hinge (MX31x, MX41x)	N/A
7	40X7546	1	1	ADF right hinge (MX51x)	N/A
8	40X9080	1	1	Speaker cable	**“Speaker cable removal” on page 328**
9	40X9055	1	1	Flatbed (legal)	**“Flatbed assembly removal” on page 327**
9	40X9056	1	1	Flatbed (A4)	**“Flatbed assembly removal” on page 327**
10	40X9053	1	1	USB cable bracket	**“USB cable bracket removal” on page 254**
11	40X9051	1	1	USB cable (MFP)	**“USB cable removal” on page 324**
12	40X9124	1	1	Scanner front cover (MX31x)	**“Scanner front cover removal” on page 315**
12	40X9062	1	1	Scanner front cover (MX41x)	**“Scanner front cover removal” on page 315**
12	40X9063	1	1	Scanner front cover (MX51x)	**“Scanner front cover removal” on page 315**
13	40X9050	1	1	Wireless cable (MFP)	**“USB wireless cable removal” on page 325**
14	40X9078	1	1	Speaker (MX31x)	**“Speaker removal” on page 254**
14	40X9079	1	1	Speaker (MX41x, MX51x)	**“Speaker removal” on page 254**

Asm-index	P/N	Units/mach	Units/FRU	Description	Removal procedure
15	40X9060	1	1	Cave light cable	**“Cave light cable removal” on page 330**
16	40X8736	1	1	ADF pick roller	N/A
17	40X9142	1	1	ADF top cover (legal)	**“ADF top cover assembly” on page 322**
17	40X9143	1	1	ADF top cover (A4, duplex)	**“ADF top cover assembly” on page 322**
17	40X9144	1	1	ADF top cover (A4, simplex)	**“ADF top cover assembly” on page 322**
18	40X9118	1	1	ADF cable (MX31x, MX41x)	**“ADF cable removal” on page 324**
18	40X9117	1	1	ADF cable (MX51x)	**“ADF cable removal” on page 324**
19	40X9093	1	1	ADF assembly (input, legal)	**“ADF unit removal” on page 316**
19	40X9059	1	1	ADF assembly (simplex)	**“ADF unit removal” on page 316**
19	40X9057	1	1	ADF assembly (A4, duplex)	**“ADF unit removal” on page 316**
NS	40X9180	1	1	Cable clamp	N/A

Assembly 3: Control panel (MX41x, MX51x)

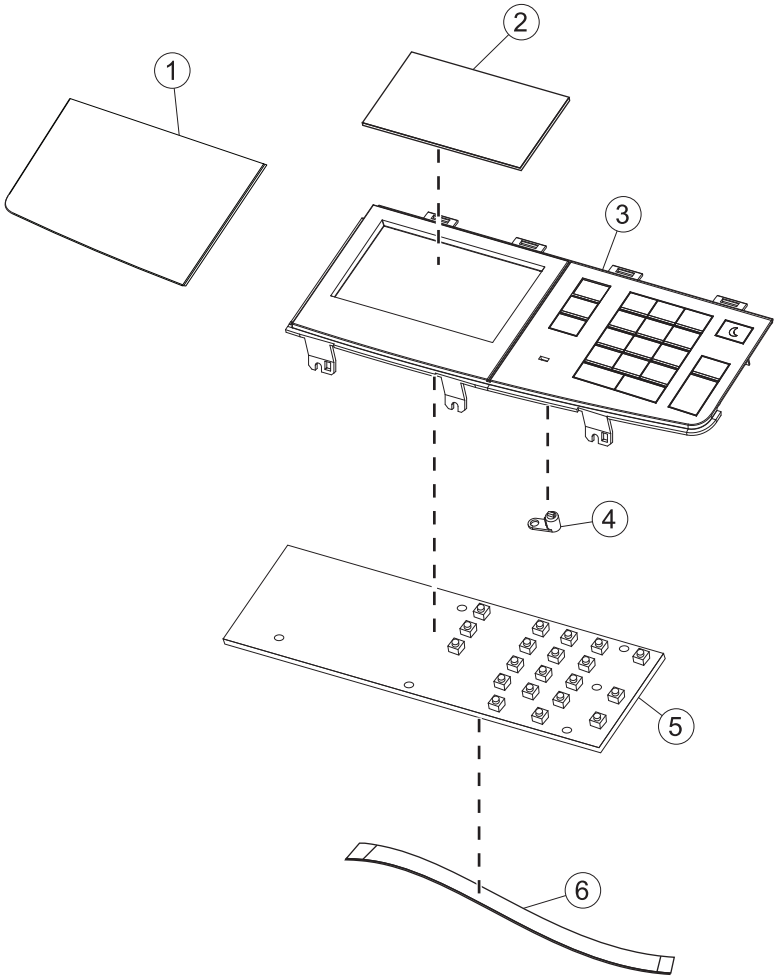

Assembly 3: Control panel (MX41x, MX51x)

Asm-index	P/N	Units/mach	Units/FRU	Description	Removal procedure
1	40X9122	1	1	Control panel cover (MX41x)	**“Control panel cover removal” on page 255**
1	40X9123	1	1	Control panel cover (MX510de)	**“Control panel cover removal” on page 255**
1	40X9149	1	1	Control panel cover (MX511de)	**“Control panel cover removal” on page 255**
1	40X9160	1	1	Control panel cover (MX511dhe)	**“Control panel cover removal” on page 255**
2	40X7116	1	1	4.3" LCD (touch-screen)	**“Display removal (MX410, MX51x)” on page 256**
3	40X9105	1	1	Control panel keypad assembly (MX41x, MX51x)	N/A
4	40X9064	1	1	Light tube	**“Light tube removal” on page 258**
5	40X9114	1	1	UICC (MX41x, MX51x)	**“UICC removal” on page 252**
6	40X9052	1	1	UICC cable	N/A

Assembly 4: Control panel (MX31x)

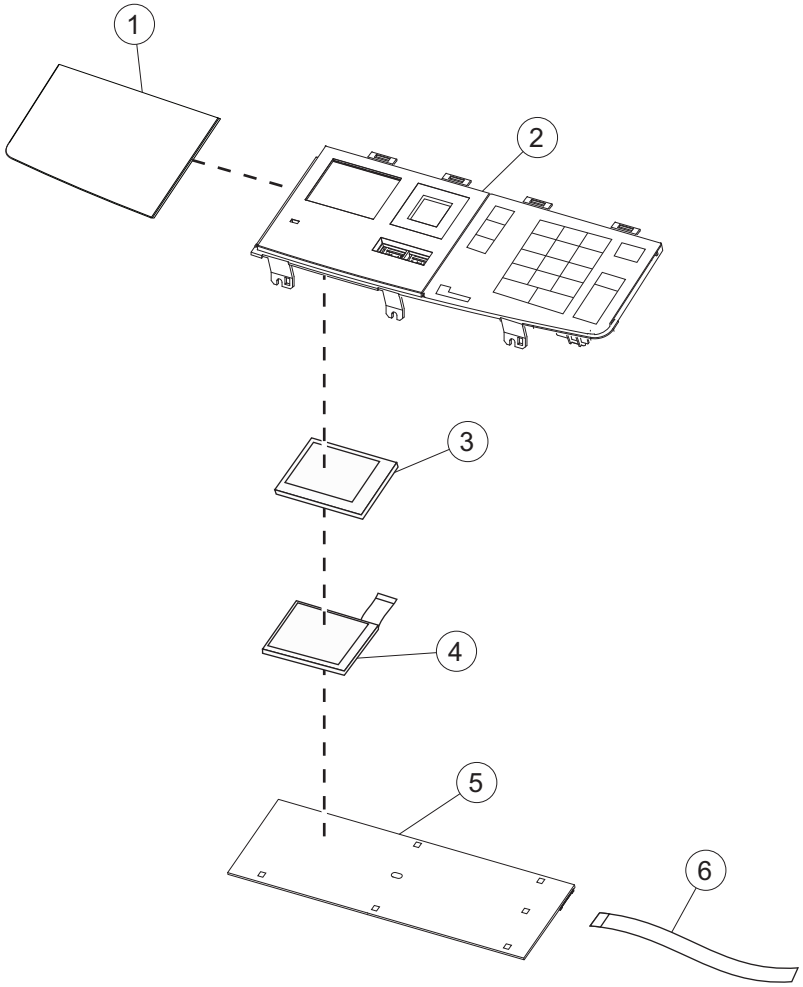

Assembly 4: Control panel (MX31x)

Asm-index	P/N	Units/mach	Units/FRU	Description	Removal procedure
1	40X9121	1	1	Control panel cover (MX31x)	**“Control panel cover removal” on page 255**
2	40X9104	1	1	Control panel keypad assembly (MX31x)	N/A
3	40X9113	1	1	Control panel lens	N/A
4	40X9111	1	1	2.4" LCD	**“Display (MX310) removal ” on page 258**
5	40X9112	1	1	UICC (MX31x)	**“UICC (MX310) removal” on page 252**
6	40X9052	1	1	UICC cable	N/A

Assembly 5: Electronics 1

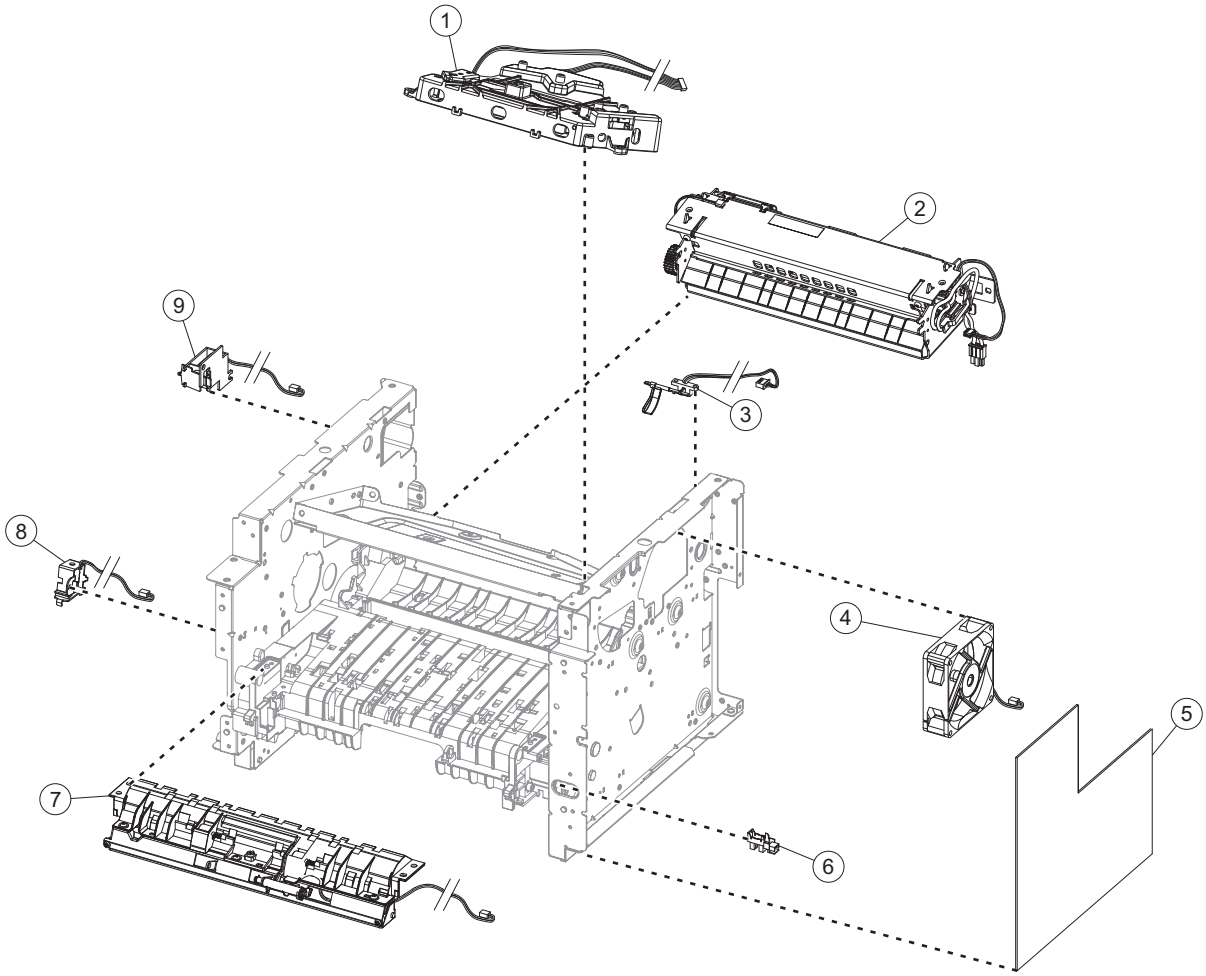

Assembly 5: Electronics 1

Asm-index	P/N	Units/mach	Units/FRU	Description	Removal procedure
1	40X8082	1	1	Laser scanning unit (MX31x)	**“Laser scanning unit (LSU) removal” on page 309**
1	40X8081	1	1	Laser scanning unit (MX41x)	**“Laser scanning unit (LSU) removal” on page 309**
1	40X8080	1	1	Laser scanning unit (MX51x)	**“Laser scanning unit (LSU) removal” on page 309**
2	40X8343	1	1	Fuser, 100 V	**“Fuser removal” on page 305**
2	40X8023	1	1	Fuser, 110 V	**“Fuser removal” on page 305**
2	40X8024	1	1	Fuser, 220 V	**“Fuser removal” on page 305**
3	40X8050	1	1	Narrow media/exit sensor	**“Narrow media/bin full sensor removal” on page 302**
4	40X8274	1	1	Cooling fan	**“Cooling fan removal” on page 230**
5	40X9065	1	1	Controller board (MX31x)	**“Controller board removal” on page 231**
5	40X9066	1	1	Controller board (MX41x)	**“Controller board removal” on page 231**
5	40X9067	1	1	Controller board (MX51x)	**“Controller board removal” on page 231**
6	40X7592	1	1	Tray present sensor	**“Tray present sensor removal” on page 229**
7	40X8280	1	1	Front input guide	**“Front input guide removal” on page 267**
8	40X8300	1	1	MPF solenoid	**“MPF solenoid removal” on page 213**
9	40X8301	1	1	Reverse solenoid	**“Reverse solenoid removal” on page 218**

Assembly 6: Electronics 2

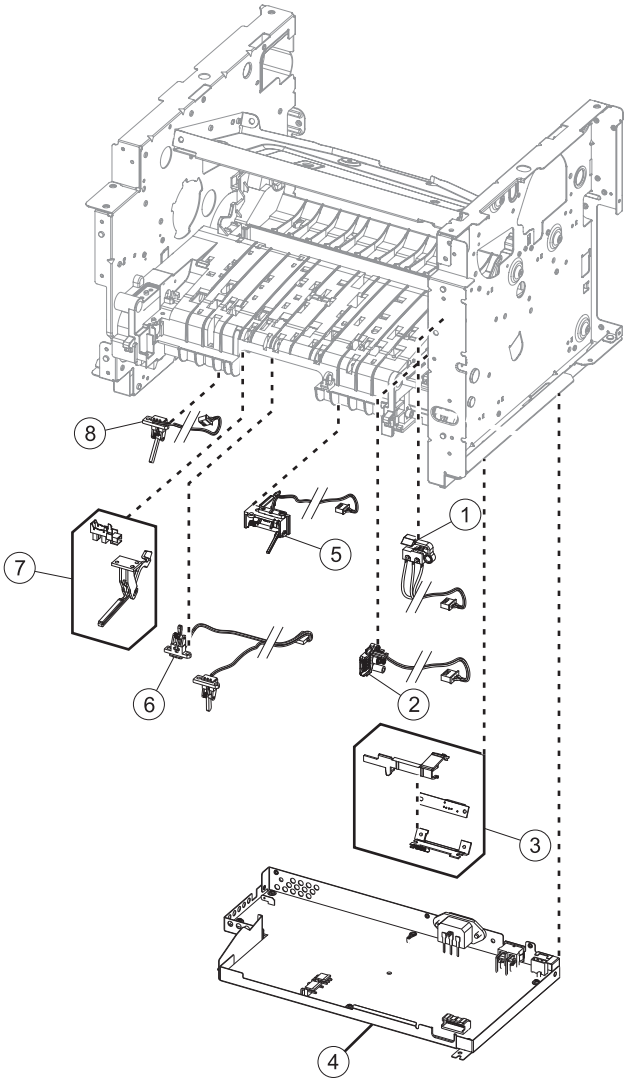

Assembly 6: Electronics 2

Asm-index	P/N	Units/mach	Units/FRU	Description	Removal procedure
1	40X8048	1	1	Front door sensor	“Front door sensor removal” on page 267
2	40X8266	1	1	Cartridge smart chip contact	“Toner cartridge smart chip contact removal” on page 236
3	40X8046	1	1	Toner density sensor	“Toner density sensor removal” on page 282
4	40X7797	1	1	Power supply, 100 V/110 V	“Power supply removal” on page 272
4	40X7798	1	1	Power supply, 220 V	“Power supply removal” on page 272
5	40X8045	1	1	Trailing edge sensor	“Trailing edge sensor removal” on page 282
6	40X8043	1	1	Duplex sensor and input sensor	“Duplex sensor and input sensor removal” on page 275
7	40X7592	1	1	Media present sensor	“Media present sensor removal” on page 280
8	40X8044	1	1	Index sensor	“Index sensor removal” on page 279

Assembly 7: Frame

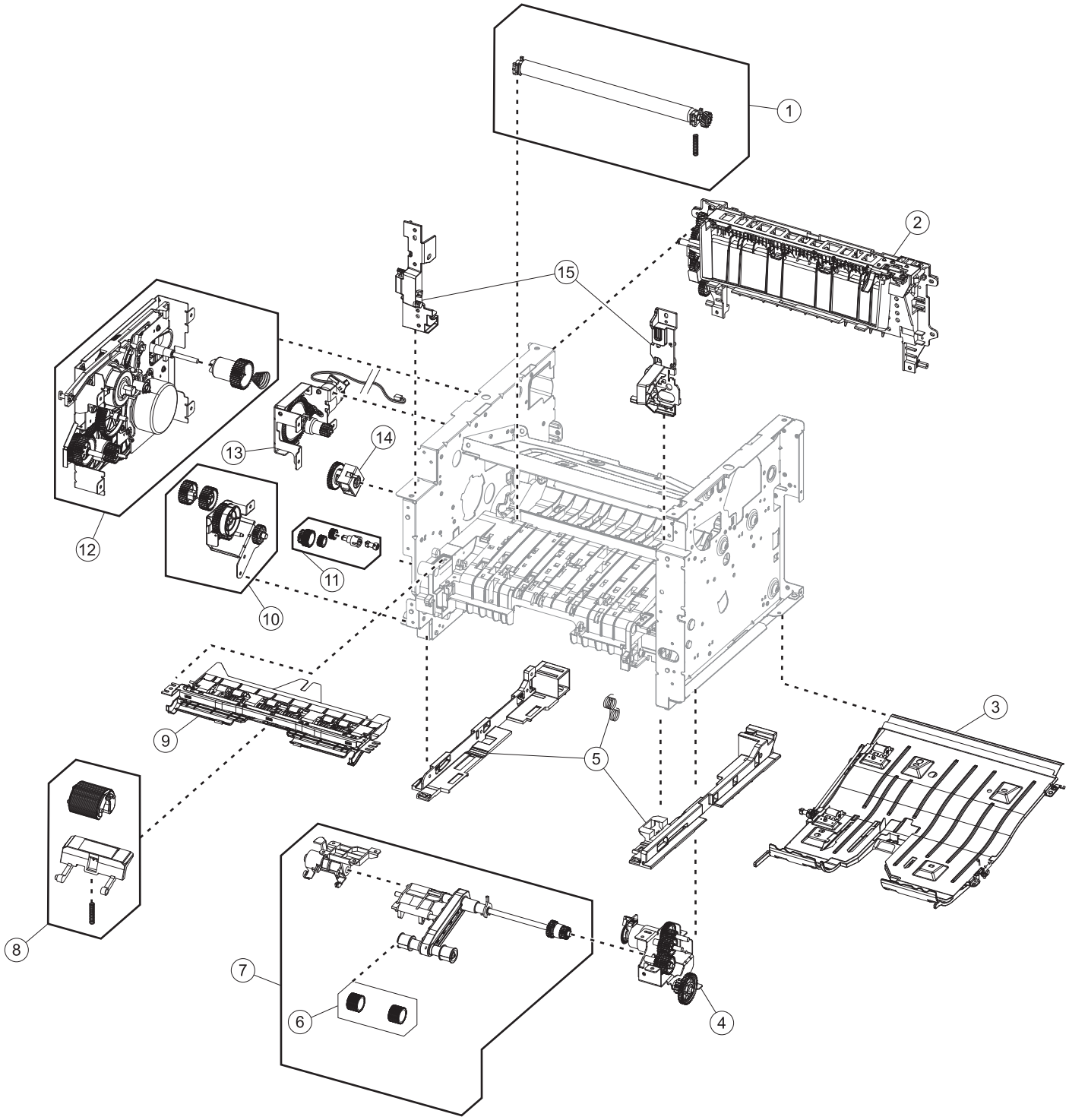

Assembly 7: Frame

Asm-index	P/N	Units/mach	Units/FRU	Description	Removal procedure
1	40X8393	1	1	Transfer roll	**“Transfer roll removal” on page 243**
2	40X9077	1	1	Redrive assembly	**“Redrive assembly removal” on page 304**
3	40X8275	1	1	Duplex assembly	**“Duplex removal” on page 274**
4	40X8084	1	1	Pick/lift motor gearbox	**“Pick/lift motor gearbox removal” on page 297**
5	40X9522	1	1	Tray guide (MX31x, MX41x)	**“Tray guide removal” on page 298**
5	40X9523	1	1	Tray guide (MX51x)	**“Tray guide removal” on page 298**
6	40X8297	2	2	Pick tire	N/A
7	40X8261	1	1	ACM assembly (MX51x)	**“ACM assembly removal” on page 288**
7	40X8260	1	1	ACM assembly (MX31x, MX41x)	**“ACM assembly removal” on page 288**
8	40X8295	2	2	MPF pick roller and separator pad	**“MPF pick roller removal” on page 263** and **“Separator pad removal” on page 269**
9	40X8279	1	1	Jam access cover	**“Jam access cover removal” on page 264**
10	40X8278	1	1	MPF gearbox	**“MPF gearbox removal” on page 215**
11	40X8277	1	1	Duplex gear assembly	**“Duplex gear assembly removal” on page 224**
12	40X8085	1	1	Main drive gearbox	**“Main drive gearbox removal” on page 211**
13	40X8083	1	1	Cartridge gearbox	**“Cartridge gearbox removal” on page 224**
14	40X8265	1	1	ACM clutch	**“ACM clutch removal (MX310, MX410)” on page 219**
15	40X8299	1	1	Front mounts	**“Left front mount removal” on page 240** and **“Right front mount removal” on page 241**

Assembly 8: Option trays

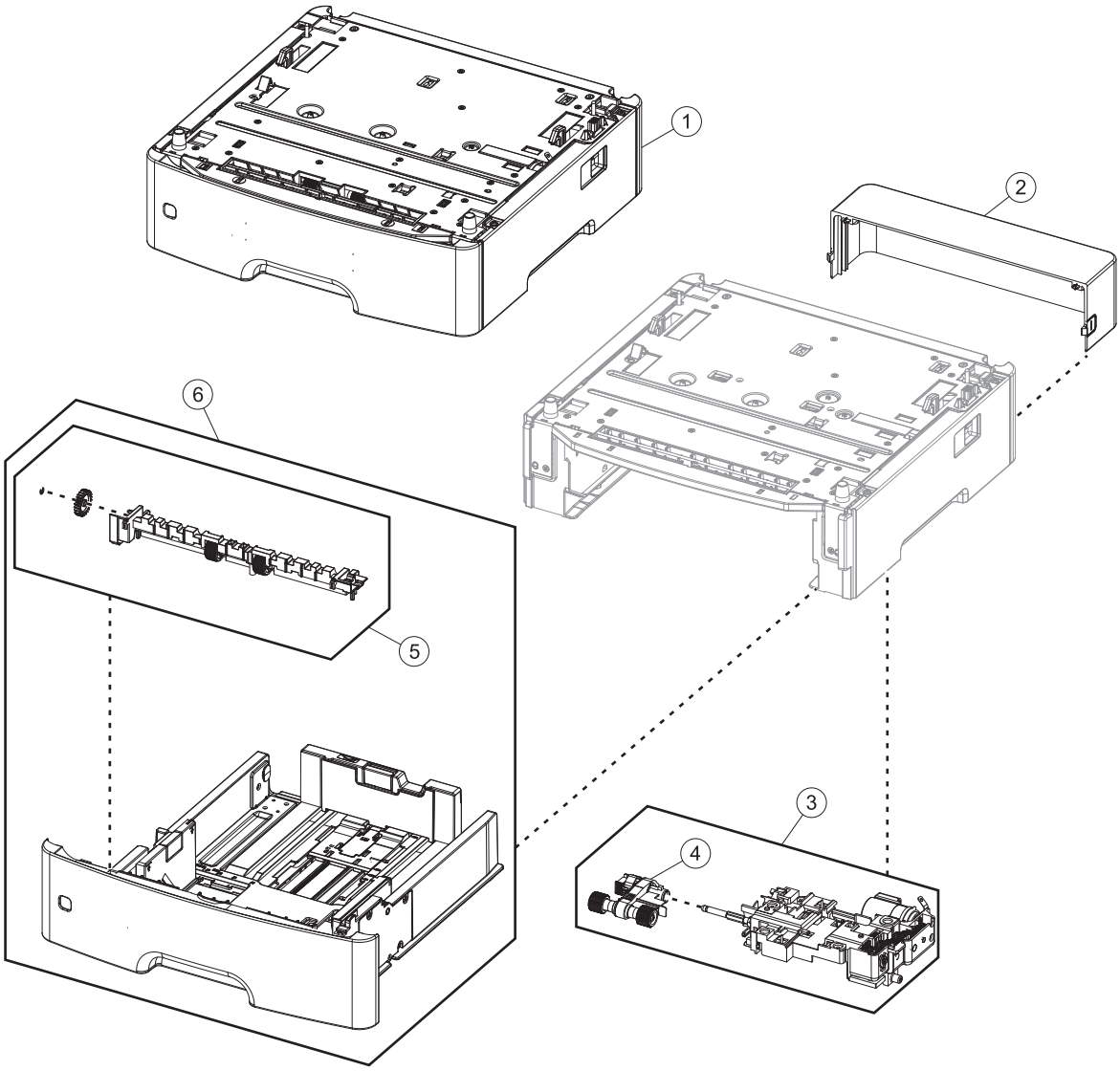

Assembly 8: Option trays

Asm-index	P/N	Units/mach	Units/FRU	Description	Removal procedure
1	40X8287	1	1	250-sheet tray	N/A
1	40X8286	1	1	550-sheet tray	N/A
2	40X8520	1	1	Dust cover, 250-sheet tray	**“Dust cover removal” on page 300**
2	40X8521	1	1	Dust cover, 550-sheet tray	**“Dust cover removal” on page 300**
3	40X8262	1	1	ACM assembly	**“ACM assembly removal” on page 334**
4	40X8443	1	1	Pick roller assembly	**“Pick roller removal” on page 332**
5	40X8444	1	1	Separator roll assembly	**“Separator roll assembly removal” on page 332**
6	40X8305	1	1	250-sheet tray insert	N/A
6	40X8303	1	1	250-sheet tray insert (MX31x, MX41x)	N/A
6	40X8086	1	1	550-sheet tray insert	N/A

Assembly 9: Maintenance kits

Asm-index	P/N	Units/mach	Units/FRU	Description	Removal procedure
NS	40X9146	1	1	Maintenance kit, 100 V	N/A
NS	40X9135	1	1	Maintenance kit, 110 V	N/A
NS	40X9146	1	1	Maintenance kit, 220 V	N/A

Assembly 10: Power cords

Asm-index	P/N	Units/mach	Units/FRU	Description	Removal procedure
NS	40X0269	1	1	Power cord, 2.5 m (straight)—USA, Canada	N/A
NS	40X3141	1	1	Power cord, 2.5 m (straight)—Europe and others	N/A
NS	40X0288	1	1	Power cord, 2.5 m (straight)—Argentina	N/A
NS	40X0271	1	1	Power cord, 2.5 m (straight)—United Kingdom	N/A
NS	40X0275	1	1	Power cord, 2.5 m (straight)—Israel	N/A
NS	40X1772	1	1	Power cord, 2.5 m (straight)—Switzerland	N/A
NS	40X1773	1	1	Power cord, 2.5 m (straight)—South Africa	N/A
NS	40X0273	1	1	Power cord, 2.5 m (straight)—Traditional Italy	N/A
NS	40X1774	1	1	Power cord, 2.5 m (straight)—Denmark	N/A
NS	40X4596	1	1	Power cord, 2.5 m (straight)—Brazil	N/A
NS	40X0303	1	1	Power cord, 2.5 m (straight)—China	N/A
NS	40X0270	1	1	Power cord, 2.5 m (straight)—Japan	N/A
NS	40X1792	1	1	Power cord, 2.5 m (straight)—Korea	N/A
NS	40X1791	1	1	Power cord, 2.5 m (straight)—Taiwan	N/A
NS	40X0301	1	1	Power cord, 2.5 m (straight)—Australia	N/A

Assembly 11: Miscellaneous

Asm-index	P/N	Units/mach	Units/FRU	Description	Removal procedure
NS	40X7856	1	1	Hard disk drive (ATA pass through)	N/A
NS	40X7858	1	1	Adapter, 802.11B/G/N - US	N/A
NS	40X7854	1	1	Adapter, fax (MX41x, MX51x)	N/A
NS	40X7855	1	1	Adapter, fax (MX31x)	N/A
NS	40X4819	1	1	Adapter, RS232C serial	N/A
NS	40X5315	1	1	Screw, shipped with ISP (2PER)	N/A
NS	40X5316	1	1	Cable, 14-pin JST- for ISP	N/A
NS	40X5317	1	1	Standoff, tee with thumbscrew	N/A
NS	40X4826	1	1	Adapter, N8120 GB INA	N/A
NS	40X4823	1	1	Adapter, parallel 1284-B THCK	N/A
NS	40X4827	1	1	Adapter, N8130 10/100 fiber	N/A
NS	40X8556	1	1	Font card, Traditional Chinese	N/A
NS	40X8557	1	1	Font card, Simplified Chinese	N/A
NS	40X8568	1	1	Font card, Korean	N/A
NS	40X8569	1	1	Font card, Japanese	N/A
NS	40X1368	1	1	USB cable, packaged (2 meters)	N/A
NS	40X8616	1	1	Forms and Barcode card	N/A
NS	40X8617	1	1	IPDS card	N/A
NS	40X8618	1	1	Prescribe card	N/A
NS	40X7445	1	1	2GB DDR3 DIMM	N/A
NS	40X7567	1	1	1GB DDR3 DIMM	N/A
NS	40X8570	1	1	Font card, Arabic	N/A
NS	40X8570	1	1	Font card, Arabic	N/A
NS	40X8571	1	1	Font card, Hebrew	N/A
NS	40X8524	1	1	Parallel 1284-B interface card (MX51x)	N/A
NS	40X8523	1	1	RS-232C Serial Interface Card (MX51x)	N/A
NS	40X8526	1	1	MarkNet N8350 802.11 b/g/n Wireless Print Server (MX51x)	N/A
NS	40X8331	1	1	MarkNet N8350 802.11 b/g/n Wireless Print Server (MX31x, MX41x)	N/A

Appendix A: Printer specifications

Electrical specifications

Low-voltage models

- 100 to 127 V ac at 50 to 60 hertz (Hz) nominal
- 90 to 137 V ac, extreme

High-voltage models

- 220 to 240 V ac at 50 to 60 hertz (Hz) nominal (not available in all countries and regions)

Operating clearances

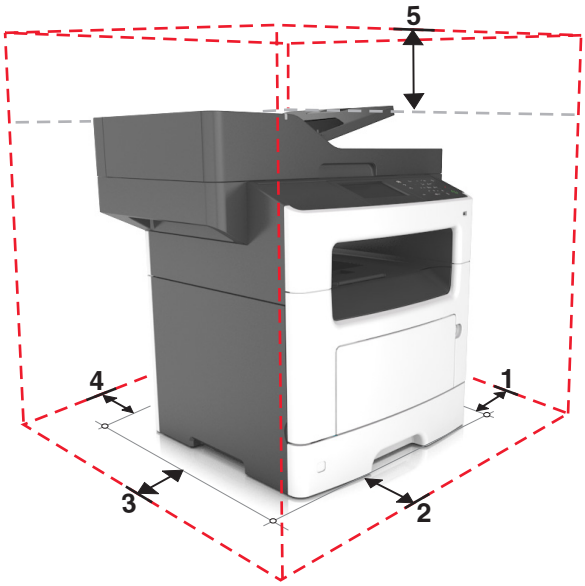

1	Right	30 cm (12 in.)
2	Front	51 cm (20 in.)
3	Left	20 cm (8 in.)
4	Rear	20 cm (8 in.)
5	Top	75 cm (29 in.)
Allow additional clearance around the printer for adding the optional input trays.		

Acoustics

All measurements are made in accordance with ISO 7779 and conform with ISO 9296.

MX310

Status	1 meter average sound pressure (dBA)	Declared sound power level (Bels)
Idle (Standby)	15 dBA	3.3 Bels
Quiet Mode	49 dBA	6.3 Bels
Printing	53 dBA	6.8 Bels
Sleep Mode	15 dBA	3.3 Bels

MX410

Status	1 meter average sound pressure (dBA)	Declared sound power level (Bels)
Idle (Standby)	15 dBA	3.3 Bels
Quiet Mode	50 dBA	6.4 Bels
Printing	55 dBA	6.9 Bels
Sleep Mode	15 dBA	3.3 Bels

MX510 and MX511

Status	1 meter average sound pressure (dBA)	Declared sound power level (Bels)
Idle (Standby)	15 dBA	3.3 Bels
Quiet Mode	51 dBA	6.5 Bels
Printing	56 dBA	7.1 Bels
Sleep Mode	15 dBA	3.3 Bels

Operating environment

Environment		Specification
Printer operating	Temperature	60 to 90 °F (16 to 32 °C)
	Relative humidity	8 to 80%
	Maximum wet bulb temperature	73 °F (23 °C)
Printer off	Temperature	50 to 110 °F (10 to 43 °C)
	Relative humidity	8 to 80%
	Maximum wet bulb temperature	80 °F (27 °C)
Ambient operating environment*	Temperature	60 to 90 °F (16 to 32 °C)
	Relative humidity	8 to 80%
*In some cases, performance specifications (such as paper OCF, EP cartridge usage) are measured at an ambient condition.		

Environment		Specification
Storage and shipping (packaged printer) with or without print cartridge	Temperature	-40 to 110 °F (-40 to 43 °C)
Altitude		10,000 ft (0 to 3,048 m)
Atmospheric pressure		74.6 kPa
Tilt		2°
*In some cases, performance specifications (such as paper OCF, EP cartridge usage) are measured at an ambient condition.		

Scanner specifications

Imaging technology: CIS—Contact image sensor

Scan resolution: 1200 x 600 dpi

A4 flatbed maximum document size: 216 x 297 mm

Legal flatbed maximum document size: 216 x 356 mm

ADF input capacity: 50 sheets

Standard ADF media types

Dimensions	Letter, Legal, A4, A5, A6, JISB5, Folio, Officio, Executive, Statement
Weight	16–24 lb, 64–90 gm/m^2

ADF speed

Simplex	Up to 50 ppm
Duplex	45 images/minute in simplex, 20 images/minute in duplex mode

CIS imaging speed

45 images/minute at 600 x 300 dpi mono
20 images/minute at 600 x 300 dpi color

Operational environment

Temperature	60 to 90 °F (16 to 32 °C)
Humidity	8% to 80%
Atmospheric pressure	101 to 74.6 kPa
Tilt	0 to 5 ° from horizontal

Storage environment

Temperature	50 to 110 °F (10 to 43 °C)
Humidity	8% to 80%
Atmospheric pressure	101 to 74.6 kPa
Storage angle	The scanner module shall operate as specified after storage for up to one year in any orientation.

Scanner assembly life

A4 flatbed	90,000 pages
Legal flatbed	120,000 pages
Simplex ADF (MX310)	90,000 pages
Duplex ADF	220,000 pages

Fax specifications

Modem speed	33.6 Kbps
Transmission speed	3 seconds/page
Maximum resolution	300 x 300 dpi
Color fax	Supported—send only
Fax memory	320 pages per 6 MB
Compression methods	JBIG2, MR, MMR, MHE, JPEG
Fax server	Supported
PC fax	Supported—send and receive
Speed dial locations	999
Broadcast locations	12
Dinstinctive ring	Supported
Secure fax	Supported
Other functions supported	Fax scheduling, fax forwarding, junk fax block, manual fax

Appendix B: Options and features

Some of the following options are not available in every country or region.

Available internal options

Memory cards

- Flash memory
- Fonts

Media handling options

Some options may not be available for all models.

1	Standard 250-sheet tray
2	Optional 550-sheet tray*
3	Optional 250-sheet tray*
4	Multipurpose feeder
* Any combination of 550-sheet and 250-sheet trays may be installed up to a total of 3 optional trays on the MX51x models only.	

Appendix C: Theory of operation

POR sequence

At power on, the engine code goes through a series of tests to verify hardware integrity. If a hardware failure is detected, it will be reported to the printer. If the POR sequence cannot be completed successfully, the printer may post an error message identifying service may be needed.

Printer control

The printer uses a single processor for both RIP and engine functions. The raster image processor (RIP) code performs system responsibilities such as PC connection, LAN, ISP attachments, and bitmap generation. The engine code performs tasks related to the operation of the electrical and mechanical device systems such as motors, lasers, power supplies, and fusers. The NVRAMs are located on the controller board and control panel, replacement of either the controller board or control panel will pull or mirror NVRAM data from each other.

Paper path information

Input tray

Component functions for feeding from the tray:

- Tray present sensor—Detects if the tray is inserted
- Media present sensor—Detects whether the media level is empty or low.
- Pick/Lift motor—Supplies the mechanical power requirements of the lift plate and the pick rollers.

When feeding media, the front part of the lift plate is raised, pressing the media to the pick rollers. The pick rollers rotate to feed the media to the separator rolls. The separator rolls rotate in a direction opposite to the pick rollers. This ensures that sheets are fed one at a time. The media is then fed to the secondary input roller and then to the first input roller.

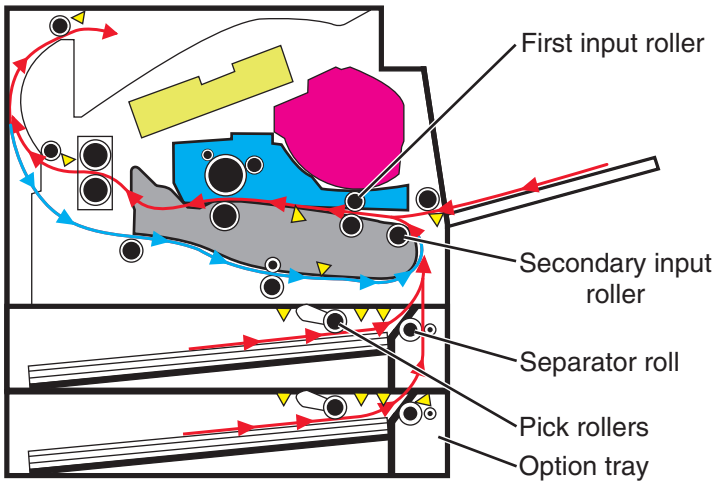

Multipurpose feeder (MPF)

The driving force from the main drive motor is transmitted through the MPF gearbox. When the MPF solenoid activates, it allows the MPF sector gear linked to the MPF gearbox to rotate. The MPF pick roll shaft is connected to the MPF sector gear.

The MPF can be accessed by opening the MPF tray on the front door. In an MPF paper feed, the MPF paper present sensor detects the media. The instant the MPF pick roll shaft rotates, the cams on each end of the shaft disengage the MPF tray. Each side of the tray is connected to the front access cover by springs. When disengaged from the shaft, the springs pull the tray causing the media to come into contact with the MPF pick roller. At the same time the pick roller rotates, pushing the media to the separator pad. The media does not pass through the secondary input roller, but directly to the first input roller.

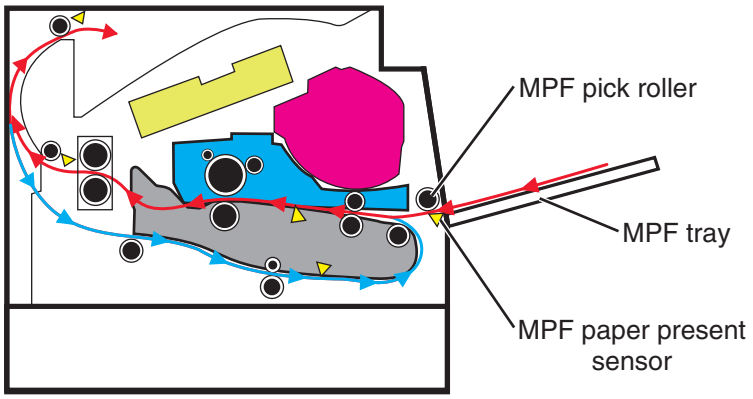

Simplex printing

Situated along the first input roller, is the deskew shutter. It subjects the media to a deskewing force based on the media width. The direction of the force is transverse to the feed direction. The leading edge of the media then passes though the input sensor.

After the edge of the media is aligned, the first input roller feeds the media to the transfer roll for toner transfer. At this point, the toner image is already on the photoconductor drum surface. As the media passes between the photoconductor drum and transfer roll, the toner image is transferred to the media.

The media with the embedded toner image goes through the fuser assembly to permanently bond the toner to the media. When it passes between the heat belt and pressure roll of the fuser assembly, the combination of heat and pressure fuses the toner image to the media. The fuser exit roller feeds the media to the paper exit roller and then to the output bin.

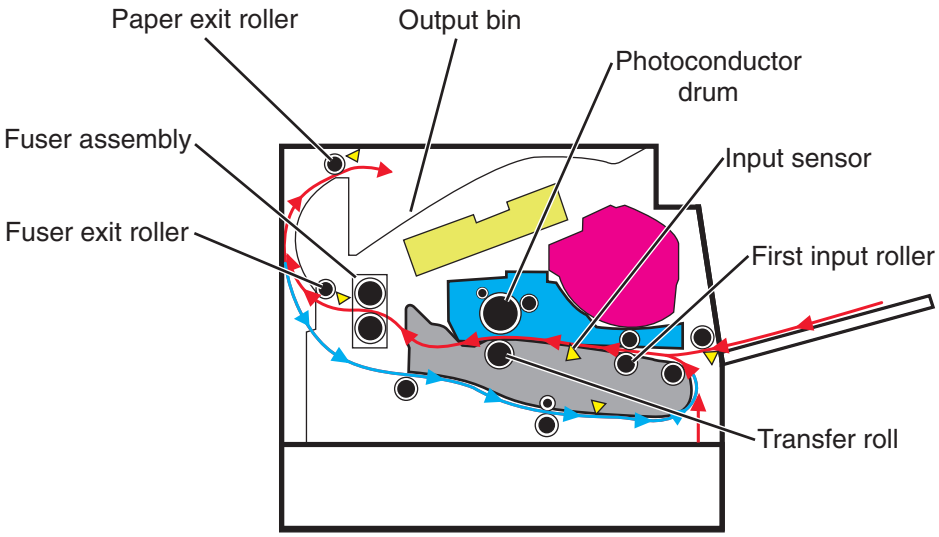

Duplex printing

After the first side of the media has been printed on and is partially fed out to the output bin, the duplex solenoid activates. This causes the exit roller to reverse its rotation and feed the media, with its trailing edge first, back into the redrive assembly and then to the duplex paper path. The duplex front and rear deliver rollers move the media through the duplex paper path, the diverter, the first input roller, and back to the primary paper path. The same process for printing on the first side of the media repeats, this time for the second side of the media.

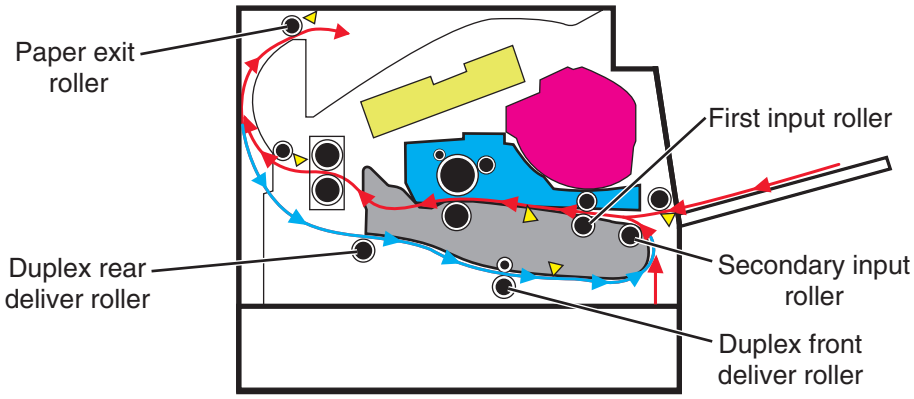

Media handling components

Main drive gearbox

The gearbox supplies all mechanical power requirements of the printer. Its motor, through several gears, transfers power to following paths: photoconductor drum, transfer roll, fuser, paper exit, input, duplex, and MPF.

Aside from providing rotational motion to rollers and feeders, the gearbox must also ensure that the print image is not distorted during the whole process. It must also provide easy and effective means to cut or break the transfer of motion when taking the cartridge unit out of the machine, or when clearing jammed sheets through its linkage system.

Autocompensator mechanism (ACM)

The fundamental function of the ACM is to pick and feed a single sheet of media and accurately deliver it to the downstream paper path. The pick arm is counterbalanced to provide a priming force throughout the entire range of paper levels in the tray. When media is picked, a subsequent sheet is not picked until the previous sheet's trailing edge is detected by the trailing edge sensor. Once the trailing edge of the media is detected, and the minimum interpage gap is satisfied, the next sheet will be picked.

Key components

Sensors

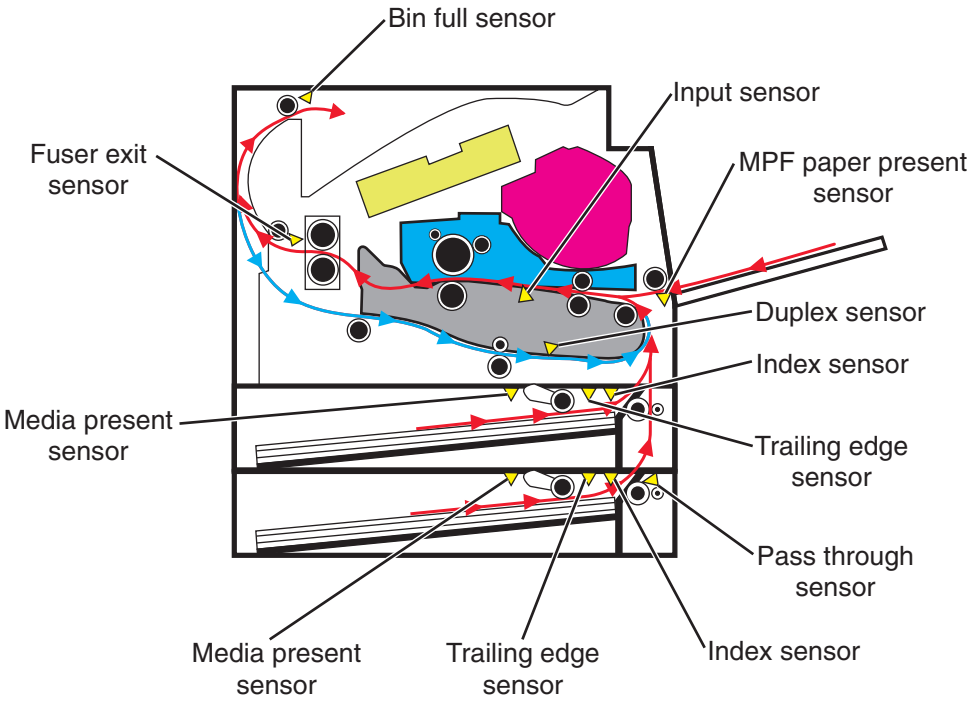

Trailing edge sensor

Detects the media’s trailing edge as it passes the pick tires. Among other capabilities, this sensor can be used to determine the paper size sensor and the media stack height.

MPF sensor

Detects the presence of media in the MPF tray.

Media present sensor

Detects the presence of media in the tray.

Tray present sensor

Detects the presence of the tray in the printer.

Bin full sensor

Detects whether the standard bin is full by moving the actuator up and down.

Toner density sensor

Detects a pre-placed toner patch and image on the photoconductor (drum) and outputs pulses when the central line of the patch image aligns with the central line of the detector. The sensor outputs pulses at the timing the patch image passes the sensor. Therefore, observing changes of intervals at which pulses are output leads to toner density detection.

Pass through sensor (option tray)

Detects when the media from the option tray passes. This will trigger the pick roller to pick the next media.

Front door sensor

Is a safety switch to cut off a 24 V DC power supply from the LVPS card assembly to the HVPS card assembly, printer system card assembly and to the main drive motor assembly, while the printer front door assembly is open.

Other key components

Cooling fan

Discharges air from the printer to prevent excessive temperature increase.

Power supply

The power supply has two main sections: the HVPS and LVPS. The HVPS card assembly generates AC power and feeds it to the developer roll, the transfer roll assembly and the charge roll assembly. The LVPS card assembly generates low voltages: 5 V DC for logic circuits, 5 V DC for laser diodes and 24 V DC for cooling fans.

Controller board

Controls the printing operation based on the communication with the RIP controller and optional peripherals. It also controls the fuser, toner dispensing, sensor switch feedback, drive motors, clutches and solenoids.

Rollers

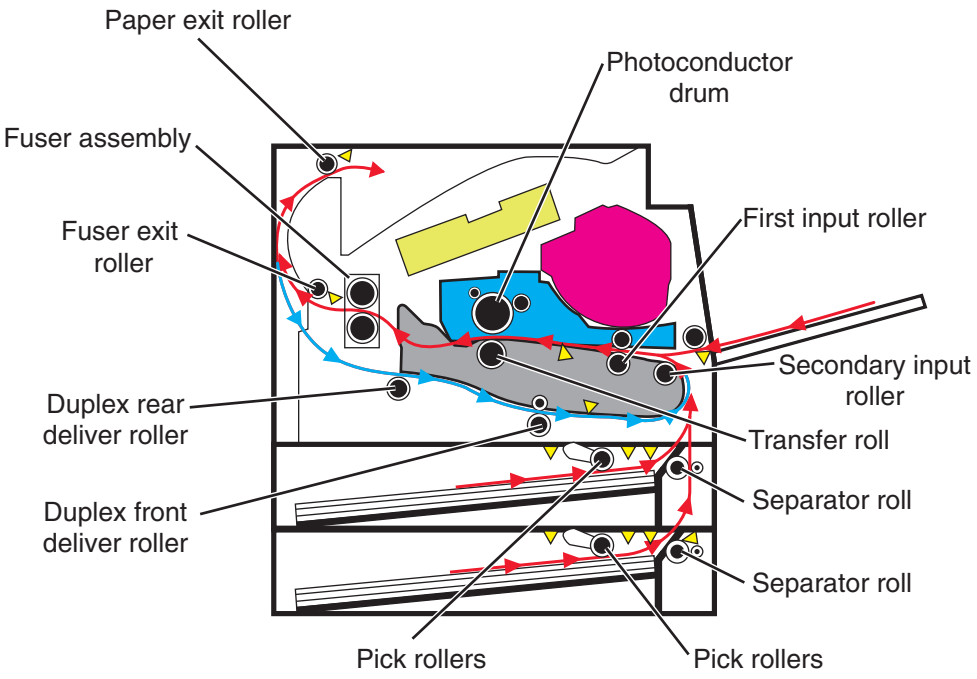

Electrophotographic process (EP process)

Printhead

The printhead scans the photo conductor drum surface with a laser beam. It consists of the following components:

- Laser diode (LD) card assembly
- Oscillator
- Start of scan card assembly

When a laser beam is scanned across the photoconductor drum surface from one end to the other while turning on and off the beam, one line of latent image is created. If the scanning by the laser beam is repeated while rotating the drum, a two-dimensional image is created. The resolution in the scanning direction (from right to left) is determined by the rotational speed of the printhead motor, depending on how quickly the laser is adjusted. The resolution in the process direction (from top to bottom) is determined by the rotational speed of the printhead motor. The higher the scanning speed becomes, the sooner the scanning of the next row can be started.

Step 1: Charge

During the charge step, voltage is sent from the HVPS to the charge roll beside the photoconductor. The charge roll applies a uniform negative charge over the entire surface of the photoconductor to prepare it for the laser beam.

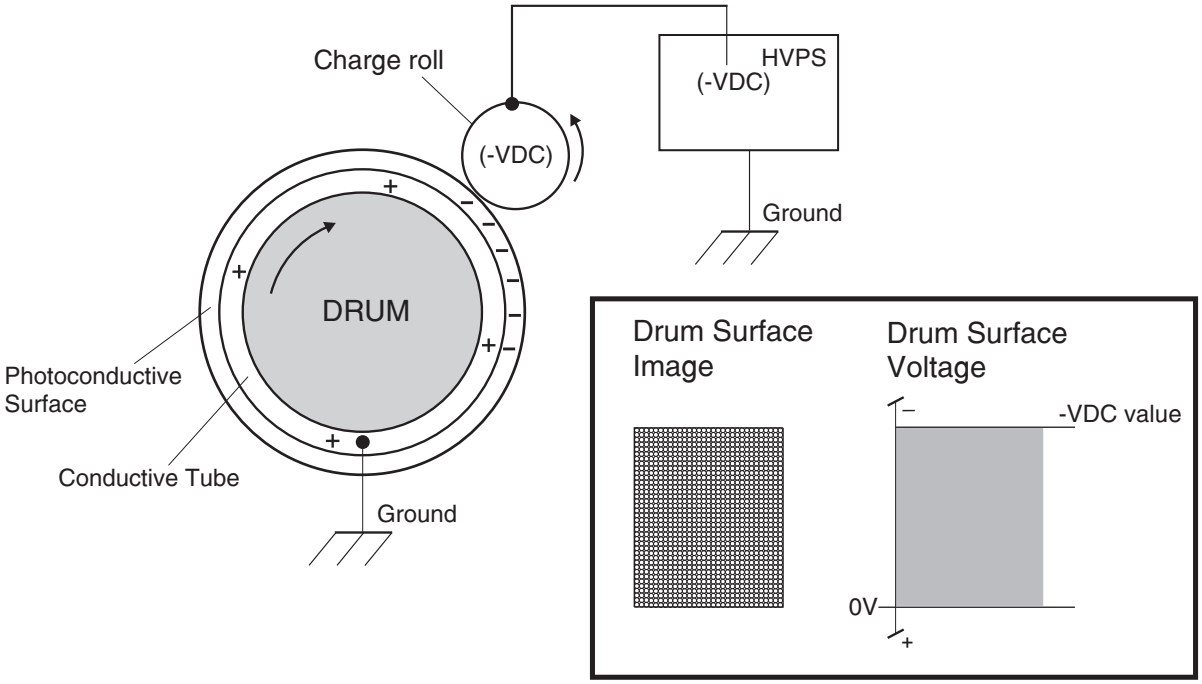

Step 2: Expose

The laser fires a focused beam of light at the surface of the photoconductor and writes an invisible image, called a latent image. The laser beam only discharges the surface where the beam hits the photoconductor. This creates a difference in charge potential between the exposed area and the rest of the photoconductor surface.

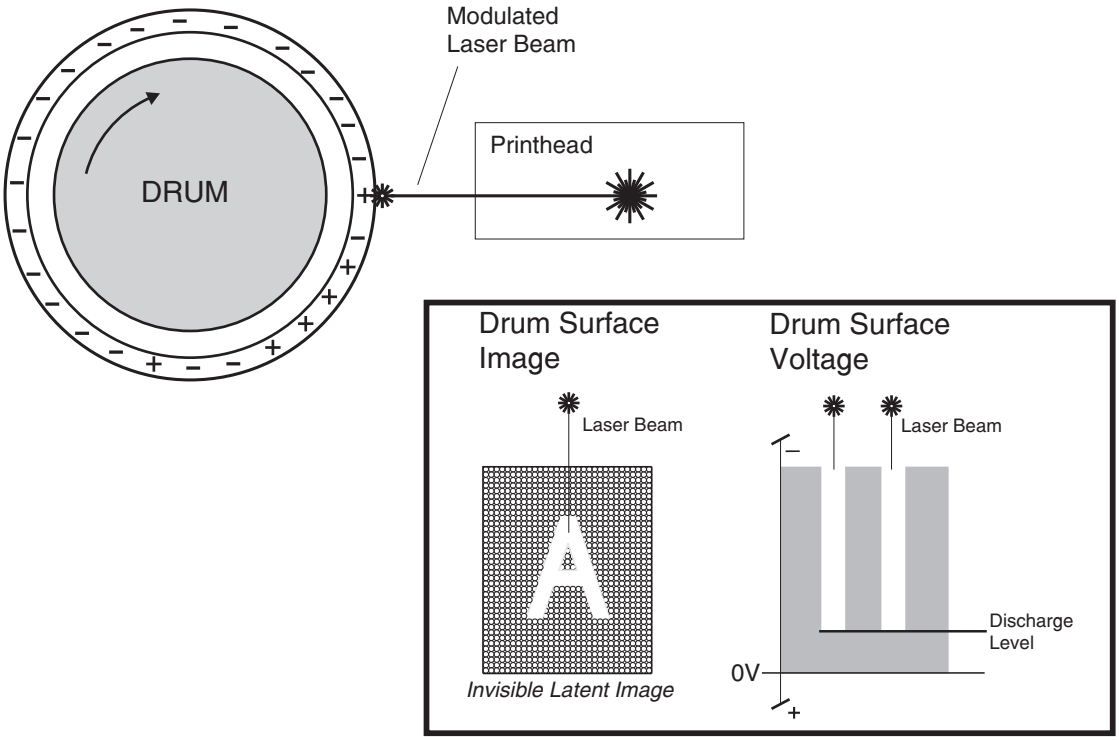

Step 3: Develop

Once the laser exposes the photoconductor, the HVPS sends charge to the developer roll. Because of the charge difference between the toner on the developer roller and the electrostatic image created by the laser, the toner is attracted to areas of the photoconductor surface exposed by the laser.

This process would be similar to using glue to write on a can and then rolling it over glitter. The glitter sticks to the glue but not to the rest of the can.

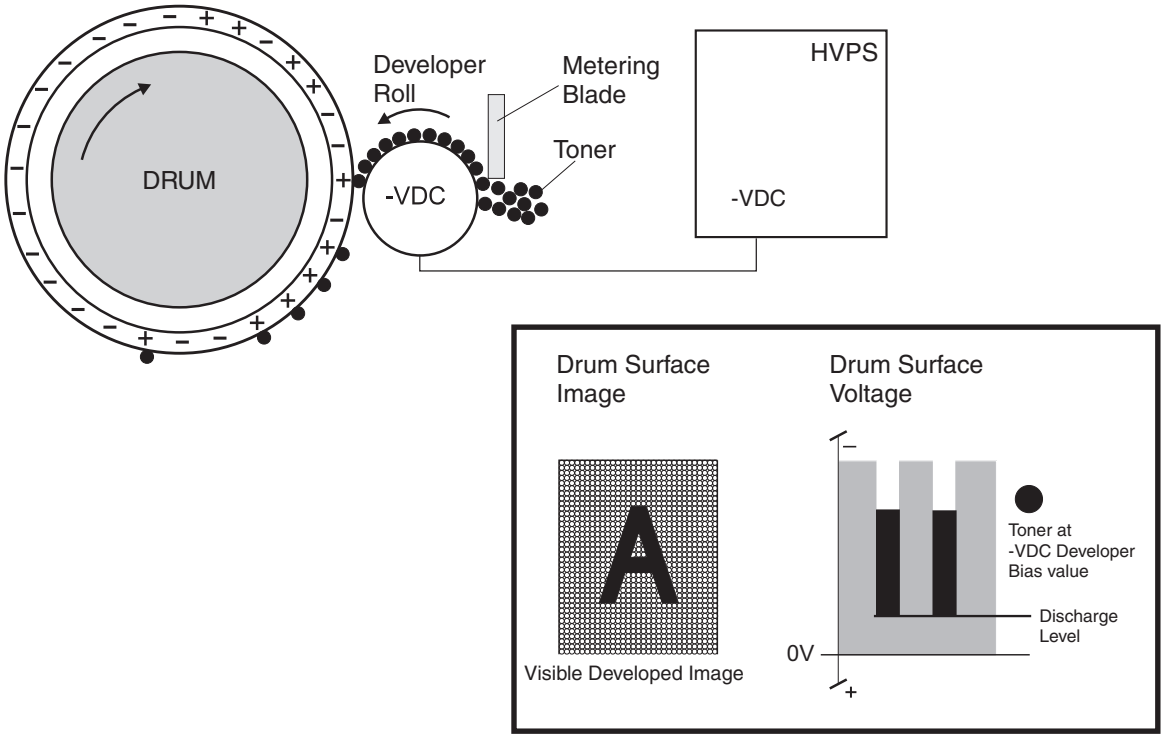

Step 4: Transfer

As the paper travels between the transfer roll and the photoconductor, the transfer roll applies a positive charge to the back of the media. This positive charge attracts the negatively charged toner image from the photoconductor to the top surface of the media.

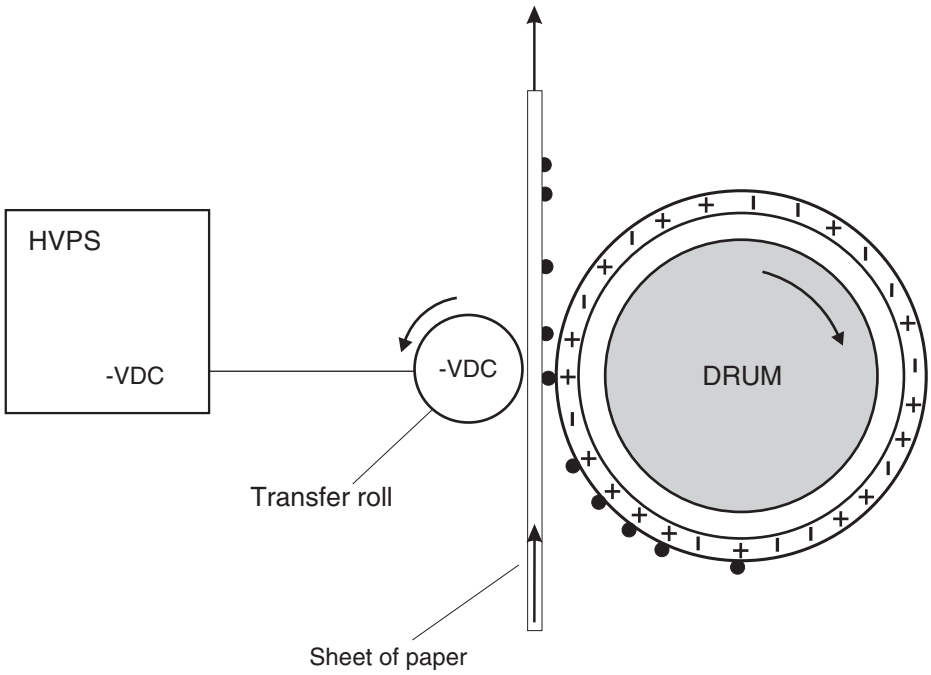

Step 5: Clean

The cleaning blade removes any toner that remains on the photoconductor after the transfer process. The toner removed is collected inside the imaging unit.

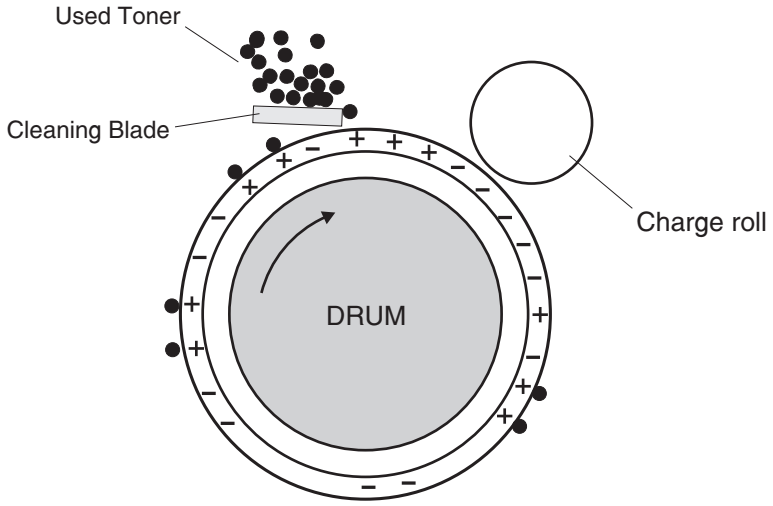

ADF theory

ADF theory of operation

ADF cross section

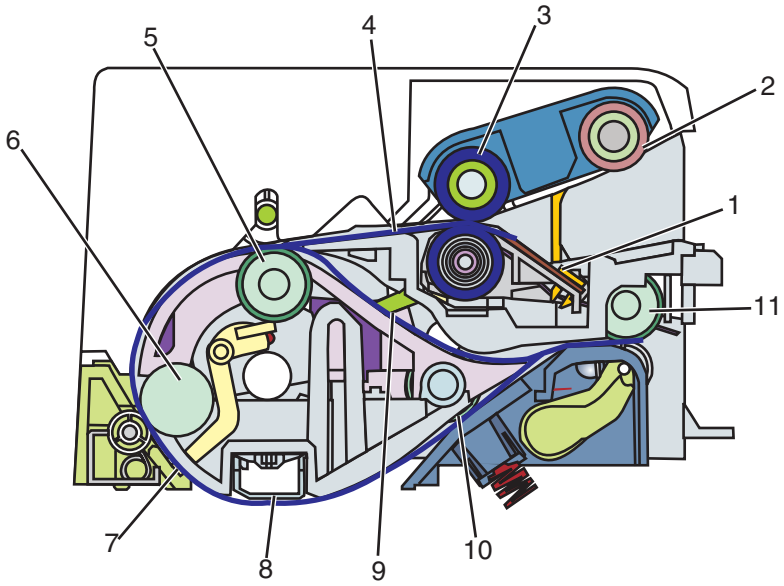

1	Document sensor
2	Pickup roller
3	Separator roller
4	Stage and interval sensors

5	Paperfeed 1 roller
6	Paperfeed 2 roller
7	Feed sensor
8	Scan area
9	Duplex sensor
10	Eject 2 roll
11	Exit roller

The duplex ADF enables the user to create duplex scans automatically, eliminating the need to stop the scanning process to flip the media being duplicated over. The ADF uses DC motors with encoder wheels, and a series of sensors to determine the media's position in the paper path during the scan process. The following steps are performed in creating a duplex scan on the duplex ADF:

Note: The simplex ADF uses only one motor for all paper transport functions, and does not have de-skew capabilities. The scanner control unit, on the controller board receives a command to create a scan, fax, or copy.

1. The scanner control unit, on the controller board receives a command to create a scan, fax, or copy.
2. A signal is sent to the ADF to poll the document sensor (1) to check if the media to be scanned is in the correct position. The media must be placed in the ADF input tray so it actuates the document sensor. If the ADF document sensor isn't actuated, a flatbed scan is run by default.
3. If the media has actuated the document sensor, then an ADF scan is executed. At this point the pickup roller (2) on the pick arm assembly drops and advances the paper into the ADF. To minimize the possibility of multiple sheets being fed, a counter rotating separator roll (3) is used. After passing through pick assembly, the media actuates the stage and interval sensors (4). Actuating these sensors determines that this will be the first side of the document to be scanned.
4. In addition the stage sensors are used to determine and correct document skew if it is present. If the stage sensors are actuated at different times, then the paper is slowly fed to the paper feed 1 roller. The feed motor encoder wheel count tracks the paper location in the paper path.
5. When the paper reaches the paper feed 1 roller (5), the stationary state of the paper feed 1 roller acts as a registration roll, causing the paper to de-skew.
6. When the encoder count reaches a certain count, the paper feed 1 roller advances the now de-skewed paper to the paper feed 2 roller (6) and the feed sensor (7). If the paper does not actuate the feed sensor before a certain encoder count is attained, a paper jam error is generated.
7. When the feed sensor is actuated the paper advances to the scan area (8). While the paper is advancing to the scan area, the DC motor encoder generates a count which is stored in an on-board counter. These counts along with the feed sensor ensure that the media is travelling at the correct speed through the scan area. The speed the document travels through the ADF scan area is dependent on the image DPI specified by the user.
8. After a predetermined number of counts, the media reaches the scan area and the image acquisition process is initiated. While the image acquisition process is executing, the feed sensor is being polled to determine if the trailing edge of the media has reached the sensor.
9. Once the trailing edge of the scan media has reached the feed sensor, that sensor goes to the off position. After the feed sensor is switched off, the image acquisition process continues for a predetermined length of time.
10. When the image acquisition process is completed, the trailing edge of the media continues to the reverse point. If the scan job is simplex, then the media continues to the exit roller (11) and exits the ADF.

11 If the scan job is a duplex scan job, then the feed motor is reversed with a swing gear when the trailing edge of the media reaches the reverse point. A swing gear moves the diverter gate to the down position.

12 The reversed exit roll (11) pulls the paper back into the ADF. The eject 2 roller then moves the media to the duplex sensor. When the duplex sensor (9) is actuated, the exit roll stops. Also, the duplex sensor indicates that this is the second side of the media to be scanned.

13 After actuating the duplex sensor, the eject 2 roll moves the media to the paper feed 1 roll, and the feed sensor. Like the first pass of the media, the image acquisition process is repeated for the second side of the media.

14 When the trailing edge of the media reaches the reverse point the second time, the swing gear again moves the diverter gate to the down position and the exit roll reverses. The paper goes back into the ADF unit for a third time. The paper passes through the paper path, but no imaging occurs. This pass is to turn the paper over to the original side up. On the third pass of the media trailing edge over the reverse point, the eject two roller does not reverse and the paper passes out of the ADF.

Appendix D: Acronyms

Acronyms

ASIC	Application-Specific Integrated Circuit
BLDC	Brushless DC Motor
BOR	Black Only Retract
CCD	Charge Coupled Device
CCP	Carbonless Copy Paper
CRC	Cyclic Redundancy Check
CSU	Customer Setup
DIMM	Dual Inline Memory Module
DRAM	Dynamic Random Access Memory
EDO	Enhanced Data Out
EP	Electrophotographic Process
EPROM	Erasable Programmable Read-Only Memory
ESD	Electrostatic Discharge
FRU	Field Replaceable Unit
GB	Gigabyte
HVPS	High Voltage Power Supply
ITU	Image Transfer Unit
K	Black
LCD	Liquid Crystal Display
LDAP	Lightweight Directory Access Protocol
LED	Light-Emitting Diode
LVPS	Low Voltage Power Supply
MB	Megabyte
MFP	Multi-Function Printer
MPF	Multipurpose Feeder
MROM	Masked Read Only Memory
MS	Microswitch
NVM	Nonvolatile Memory
NVRAM	Nonvolatile Random Access Memory
OEM	Original Equipment Manufacturer
OPT	Optical Sensor
PC	Photoconductor

pel, pixel	Picture element
POR	Power-On Reset
POST	Power-On Self Test
PSD	Position Sensing Device
PWM	Pulse Width Modulation
RIP	Raster Imaging Processor
ROM	Read Only Memory
SDRAM	Synchronous Dual Random Access Memory
SIMM	Single Inline Memory Module
SRAM	Static Random Access Memory
TPS	Toner Patch Sensing
V ac	Volts alternating current
V dc	Volts direct current
VTB	Vacuum Transport Belt

Index

Symbols

A

B

C

D

E

F

H

I

J

K

L

M

N

O

P

R

S

T

U

V

Z

Part number index

Part name index

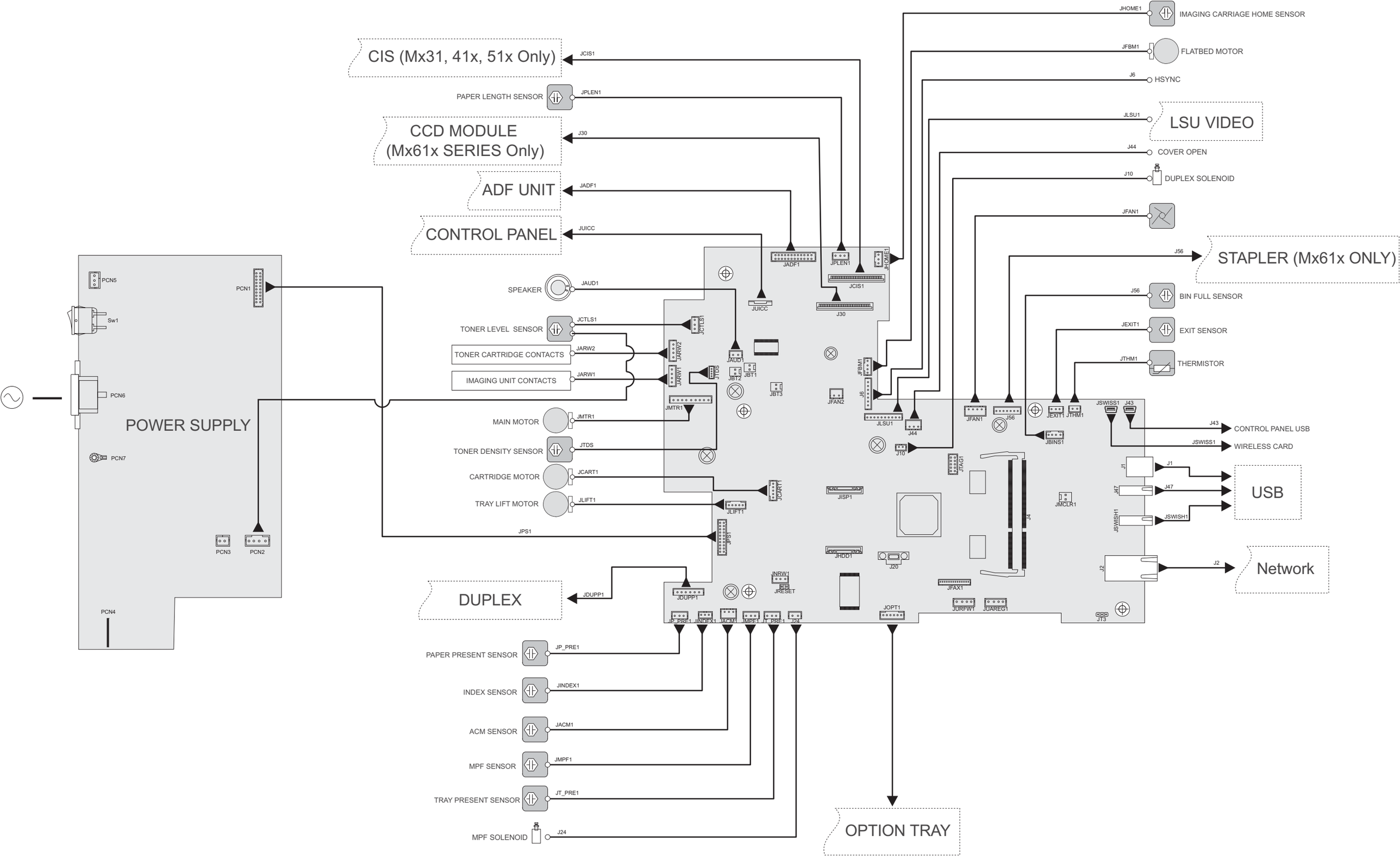

For signal, voltage and ground information, click here.